Split Bearing - Slim

ball thrust bearing type

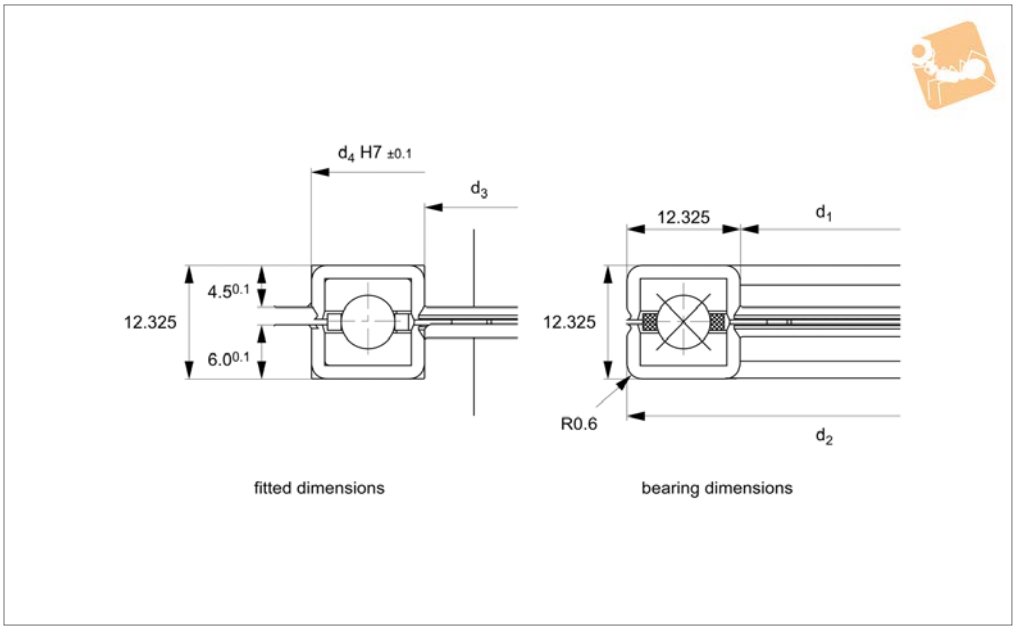

R4209

Material
Corrosion resistant, hardened steel bearing ring and balls 1,4304.

Ball cage - polyamide 12 plastic.

Technical Notes
Metric preferred sizes.

Tips
Our split bearings are compatable with most other manufacturers and are very cost

Order No.	d_1 & d_3 mm	d_2 mm	d_4 mm	Dyn. load $C_{ax.}$ kN max.	Speed min.-1 max.	Static load $C_{0\ ax.}$ kN max.	Weight kg
R4209.070	175.0	199.65	200.0	16.8	870	115.2	0.32
R4209.075	187.7	212.35	212.7	17.1	810	122.4	0.34
R4209.080	200.4	225.05	225.4	17.6	760	131.4	0.36
R4209.085	213.1	237.75	238.1	17.8	720	138.6	0.38
R4209.090	225.8	250.45	250.8	18.3	680	147.6	0.41
R4209.095	238.5	263.15	263.5	18.7	640	156.6	0.43
R4209.100	251.2	275.85	276.2	19.0	610	163.8	0.45
R4209.105	263.9	288.55	288.9	19.4	580	172.8	0.47
R4209.110	276.6	301.25	301.6	19.7	550	180.0	0.50
R4209.115	289.3	313.95	314.3	20.0	530	189.0	0.52
R4209.120	302.0	326.65	327.0	20.3	510	196.2	0.54
R4209.130	327.4	352.05	352.4	20.9	470	212.4	0.59
R4209.140	352.8	377.45	377.8	21.5	430	228.6	0.63
R4209.150	378.2	402.85	403.2	22.1	400	244.8	0.68
R4209.160	403.6	428.25	428.6	22.5	380	261.0	0.72
R4209.170	429.0	453.65	454.0	23.0	360	277.2	0.77
R4209.180	454.4	479.05	479.4	23.6	340	293.4	0.81
R4209.190	479.8	504.45	504.8	24.0	320	309.6	0.86
R4209.200	505.2	529.85	530.2	24.1	300	325.8	0.90
R4209.210	530.6	555.25	555.6	24.8	290	342.0	0.95
R4209.220	556.0	580.65	581.0	25.3	270	358.2	0.99
R4209.230	581.4	606.05	606.4	25.7	260	374.4	1.04
R4209.240	606.8	631.45	631.8	26.2	250	390.6	1.08
R4209.250	632.2	656.85	657.2	26.5	240	406.8	1.13
R4209.260	657.6	682.25	682.6	26.9	230	423.0	1.17
R4209.270	683.0	707.65	708.0	27.4	220	441.0	1.22
R4209.280	708.4	733.05	733.4	27.6	220	459.0	1.26
R4209.290	733.8	758.45	758.8	27.9	210	468.0	1.31
R4209.300	759.2	783.85	784.2	28.3	200	486.0	1.35
R4209.310	784.6	809.25	809.6	28.7	190	504.0	1.40
R4209.320	810.0	834.65	835.0	29.0	190	522.0	1.44
R4209.330	835.4	860.05	860.4	29.3	180	540.0	1.49
R4209.340	860.8	885.45	885.8	29.7	180	549.0	1.53