Ball and Socket Joint

left hand thread- with flats on housing

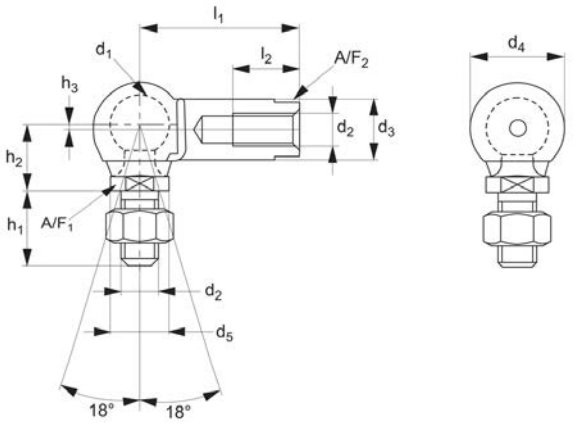

R3491

Material

Stud: carbon steel, sealing cap: neoprene. Housing: steel (9sMnPb28), silver zinc plated.

Technical Notes

To DIN 71802 form CS, supplied with hexagon nut.

Safety ring aids the retention of the ball stud in the housing.
*M14x1,5 is a fine pitch thread.

Tips

Stud: right hand thread.
Housing: left hand thread

Important Notes

Thread is not full length. There is a min 1.5mm unthreaded shank. If using part without the supplied nut, then please consider a counterbore to accommodate the unthreaded shank.

Order No.	Thread hand	d_1	l_1 ±0.3	d_2	d_3 ±0.5	d_4 ±0.5	d_5 ±0.5	Weight g
R3491.L005	Left	8	22	M5	8	12.8	8	15.2
R3491.L006	Left	10	25	M6	10	14.8	10	25.2
R3491.L008	Left	13	30	M8	13	19.3	13	53.1
R3491.L010	Left	16	35	M10	16	24.0	16	103.8
R3491.L012	Left	16	35	M12	16	24.0	16	103.8
R3491.L014	Left	19	45	M14x1,5	22	30.0	22	220.9
R3491.L015	Left	19	45	M14	22	30.0	22	220.9
R3491.L016	Left	19	45	M16	22	30.0	22	220.9

Order No.	h_1 ±0.3	h_2 ±0.3	h_3	l_2 min.	A/F_1	A/F_2	Extraction force kg min.	Static load kg max.	Dyn. load C kg max.	Force required for movement kg max.
R3491.L005	10.0	9	0.65	10.2	7	-	3	50	20	3
R3491.L006	12.5	11	0.70	11.5	8	-	4	100	40	4
R3491.L008	16.5	13	1.15	14.0	11	-	6	200	80	6
R3491.L010	20.0	16	1.15	15.5	13	-	8	400	160	8
R3491.L012	20.0	16	1.15	15.5	13	-	8	400	160	8
R3491.L014	28.0	20	0.50	21.5	16	19	10	800	320	10
R3491.L015	28.0	20	0.50	21.5	16	19	10	800	320	10
R3491.L016	28.0	20	0.50	21.5	16	19	10	800	320	10