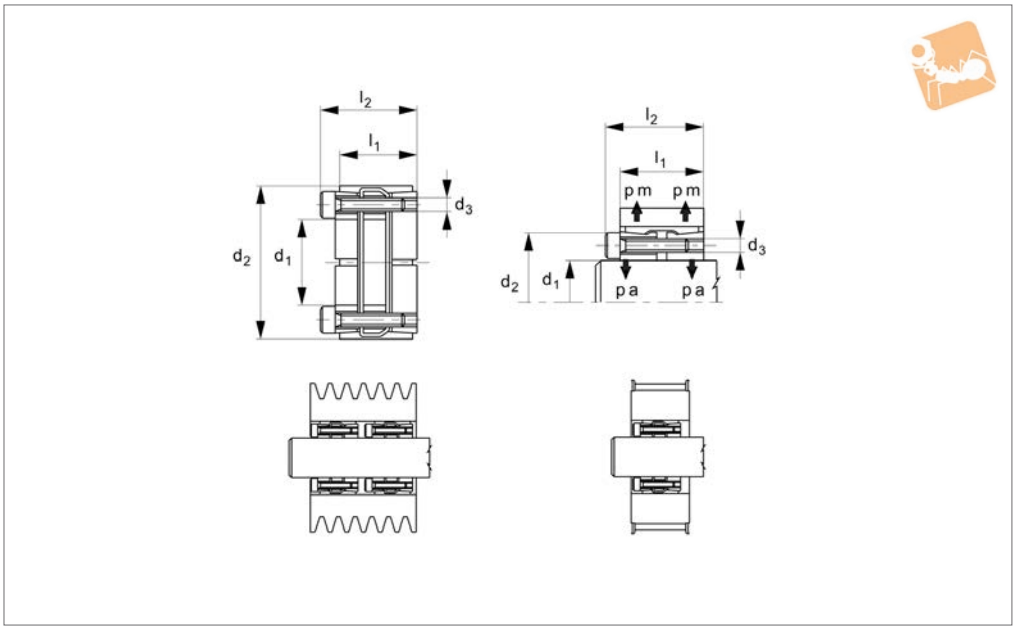

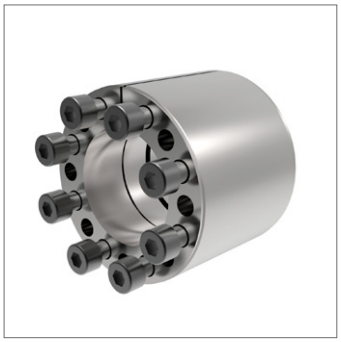

R3234

Material
Steel.

Technical Notes
Capable of withstanding bending movements. Compact size.
Shaft & hub surface roughness: Rt max. 16µ, Ra 3µ

Tips
Do not use any oil with molybdenum bisulphide, high pressure additives,
or grease as these reduce the coefficient of friction.
Max torque (Mt) and Axial thrust (Fa) values are only valid if standard oils are used.

Important Notes

Assembly:
Carefully clean the hub and shaft contact surfaces and apply a film of lightweight oil. Slide the locking assembly into the hub bore, insert the shaft
and tighten gradually in cross sequence to 50% of torque value indicated in table. Repeat the same operation by tightening all screws to rated torque.
Re-check screws are tightened up to torque value in the table.
Disassembly:
Loosen the cap screws. Insert the screws into the dismantling threading and tighten gradually
and regularly in crossed sequence up to 50% of torque value indicated in the rating table.
When the front cone is loose, to release the rear cone keep tightening the screws and repeat the sequence above.

Order No.	d_1 tol. h8	l_1	d_2 tol. H8	l_2	No. of screws	d_3	Torque to Nm	M_t torque Nm max.	F_a kN max.	P_a N/mm² max.	P_m N/mm² max.	Weight kg
R3234.025	25	40	55	46	6	M 6x35	18	840	67	295	134	0.602
R3234.028	28	40	55	46	6	M 6x35	18	940	67	264	134	0.510
R3234.030	30	40	55	46	6	M 6x35	18	1000	67	246	134	0.420
R3234.035	35	54	60	60	7	M 6x45	18	1300	74	174	101	0.498
R3234.038	38	54	75	62	7	M 8x50	41	2600	74	296	150	1.108
R3234.040	40	54	75	62	7	M 8x50	41	2900	145	281	150	1.048
R3234.042	42	54	75	62	7	M 8x50	41	2930	145	268	150	1.050
R3234.045	45	54	75	62	7	M 8x50	41	3260	145	250	150	0.982
R3234.048	48	54	80	62	8	M 8x55	41	3800	155	207	124	1.330
R3234.050	50	64	80	72	8	M 8x55	41	4150	155	200	98	1.284
R3234.055	55	64	85	72	9	M 8x55	41	5150	186	205	104	1.376
R3234.060	60	64	90	72	10	M 8x55	41	6200	207	202	106	1.524
R3234.065	65	64	95	72	10	M 8x55	41	6750	207	187	100	1.630
R3234.070	70	78	110	88	10	M10x60	83	11500	329	223	114	2.932
R3234.075	75	78	115	88	10	M10x60	83	12060	329	223	114	3.128
R3234.080	80	78	120	88	11	M10x60	83	14500	360	215	115	3.258
R3234.085	85	78	125	88	12	M10x60	83	15100	360	215	115	3.400
R3234.090	90	78	130	88	12	M10x60	83	17600	390	208	115	3.602
R3234.095	95	78	135	88	12	M10x60	83	18300	390	208	115	4.000
R3234.100	100	100	145	112	11	M12x80	145	23300	467	200	107	5.900
R3234.110	110	100	155	112	12	M12x80	145	30400	553	198	110	6.000

Keyless Locking Devices

self centring, high torque

Order No.	d_1 tol. h8	l_1	d_2 tol. H8	l_2	No. of screws	d_3	Torque to Nm	M_t torque Nm max.	F_a kN max.	P_a N/mm² max.	P_m N/mm² max.	Weight kg
R3234.120	120	100	165	112	14	M12x80	145	37000	617	212	120	6.600
R3234.130	130	116	180	130	12	M14x90	230	49000	759	192	112	10.200
R3234.140	140	116	190	130	14	M14x90	230	59000	843	208	124	10.500
R3234.150	150	116	200	130	15	M14x90	230	67000	897	208	127	11.000
R3234.160	160	116	210	130	16	M14x90	230	76000	950	208	128	12.000
R3234.170	170	148	225	164	16	M16x110	360	102000	1223	182	113	17.000
R3234.180	180	148	235	164	16	M16x111	360	115000	1289	184	115	18.400
R3234.190	190	148	250	164	16	M16x112	360	130000	1363	186	116	21.400
R3234.200	200	148	260	164	16	M16x113	360	143700	1438	177	112	21.800