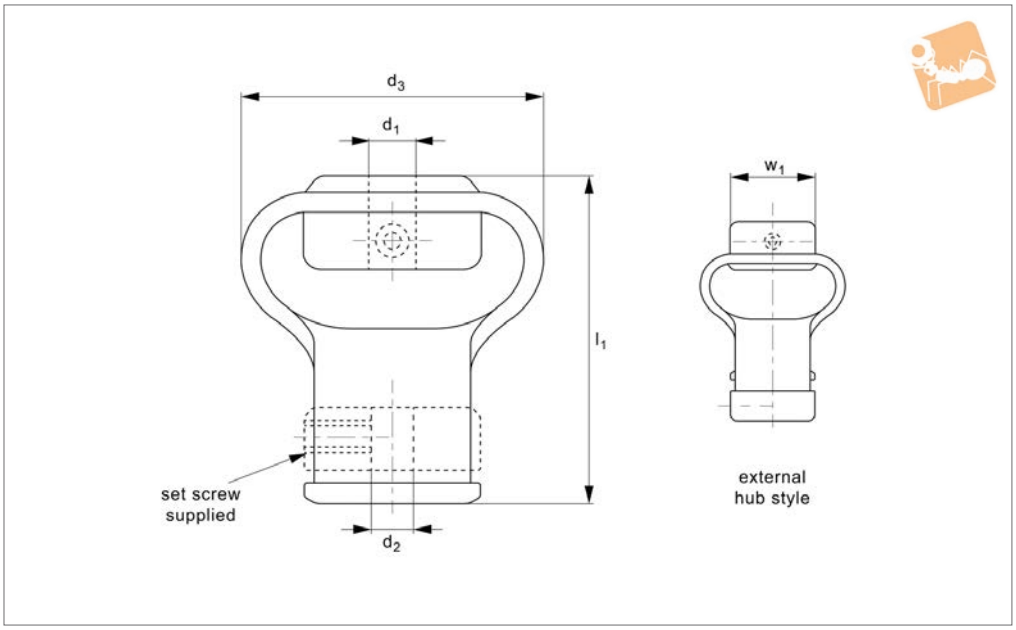

R3040

Material
Black polyurethane with plated mild steel hub.

Technical Notes
Absorbs end play.
3,600 rpm max.

Quiet running.
Maintenance free (no moving parts).

Order No.	Hub	d_1 & d_2	d_3	l	w	Torque Ncm max.	Lat. misalign. max.	Angle misalign. max.
R3040.005-E	External	5	28.5	28.5	17.5	30	2.4	10°
R3040.006-E	External	6	28.5	28.5	17.5	30	2.4	10°
R3040.008-E	External	8	28.5	28.5	17.5	30	2.4	10°
R3040.010-E	External	10	28.5	28.5	17.5	30	2.4	10°
R3040.006-I	Internal	6	47.5	44.5	25.5	135	3.2	15°
R3040.008-I	Internal	8	47.5	44.5	25.5	135	3.2	15°
R3040.010-I	Internal	10	47.5	44.5	25.5	135	3.2	15°
R3040.011-I	Internal	11	47.5	44.5	25.5	135	3.2	15°
R3040.013-I	Internal	13	47.5	44.5	25.5	135	3.2	15°
R3040.110-I	Internal	10	54.0	54.0	32.0	315	4.7	15°
R3040.111-I	Internal	11	54.0	54.0	32.0	315	4.7	15°
R3040.113-I	Internal	13	54.0	54.0	32.0	315	4.7	15°
R3040.014-I	Internal	14	54.0	54.0	32.0	315	4.7	15°
R3040.016-I	Internal	16	54.0	54.0	32.0	315	4.7	15°
R3040.213-I	Internal	13	54.0	60.5	32.0	450	3.2	15°
R3040.114-I	Internal	14	54.0	60.5	32.0	450	3.2	15°
R3040.116-I	Internal	16	54.0	60.5	32.0	450	3.2	15°