Spiral Beam Coupling - Aluminium

clamping type - short type

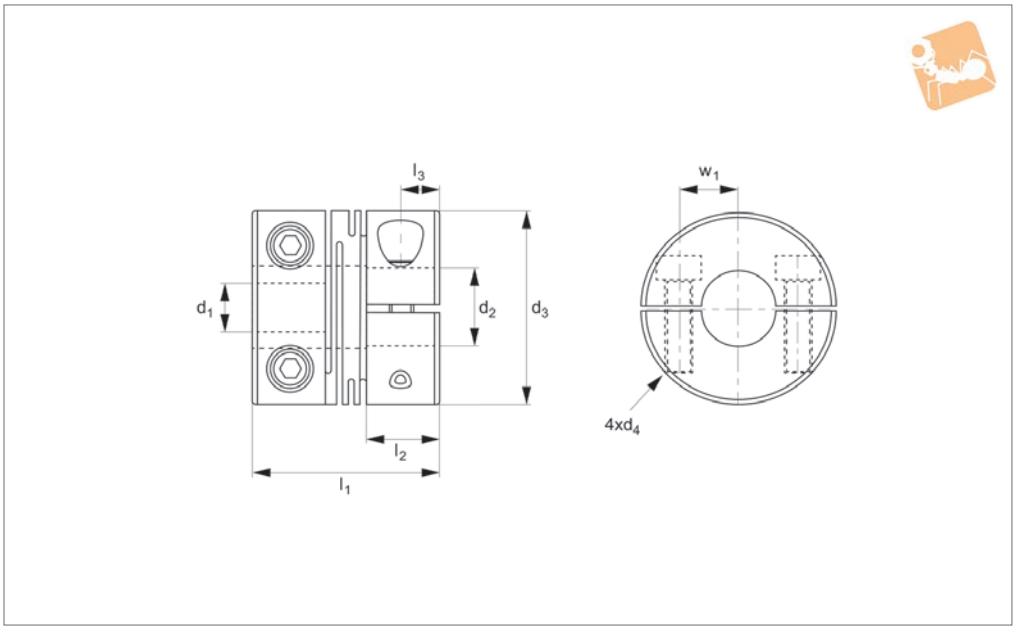

R3007.1

Material

Anodized aluminium AL7075

Technical Notes

Zero backlash.
The flexure allowed by the beam portion of the coupling is capable of accommodating angularand axial misalignment. High wrench torque rigidity and sensitivity.
Rotation character of clockwise or anti-clockwise are exactly the same.
Free maintenance, oil-resist and anti-corrossiveness.
R3007 can't allow axial deviation caused by offset.
Offset of angular, parallel or axial deviation are individual allowed valure, so couple reasons of axial offset appearing at same time would reduce the unit allowable value.

Order No.	d_1 tol. h8	d_2 tol. h8	d_3	d_4	l_1	l_2	l_3	w_1
R3007.A-4-4	4	4	12	2	14	5.2	2.6	4
R3007.A-4-5	4	5	12	2	14	5.2	2.6	4
R3007.A-5-5	5	5	12	2	14	5.2	2.6	4
R3007.B-5-5	5	5	16	2.5	18	6.8	3.4	5
R3007.B-5-6	5	6	16	2.5	18	6.8	3.4	5
R3007.B-6-6	6	6	16	2.5	18	6.8	3.4	5
R3007.C-5-6	5	6	20	2.5	20	7.65	3.8	6.5
R3007.C-5-7	5	7	20	2.5	20	7.65	3.8	6.5
R3007.C-5-8	5	8	20	2.5	20	7.65	3.8	6.5
R3007.C-6-6	6	6	20	2.5	20	7.65	3.8	6.5
R3007.C-6-7	6	7	20	2.5	20	7.65	3.8	6.5
R3007.C-6-8	6	8	20	2.5	20	7.65	3.8	6.5
R3007.C-8-8	8	8	20	2.5	20	7.65	3.8	6.5
R3007.D-5-6	5	6	25	3	25	9.6	4.8	9
R3007.D-6-6	6	6	25	3	25	9.6	4.8	9
R3007.D-6-8	6	8	25	3	25	9.6	4.8	9
R3007.D-6-10	6	10	25	3	25	9.6	4.8	9
R3007.D-8-8	8	8	25	3	25	9.6	4.8	9
R3007.D-8-10	8	10	25	3	25	9.6	4.8	9
R3007.D-10-10	10	10	25	3	25	9.6	4.8	9
R3007.E-8-8	8	8	32	4	32	12.6	6.3	11
R3007.E-8-10	8	10	32	4	32	12.6	6.3	11
R3007.E-10-10	10	10	32	4	32	12.6	6.3	11
R3007.E-10-12	10	12	32	4	32	12.6	6.3	11
R3007.E-10-14	10	14	32	4	32	12.6	6.3	11
R3007.E-12-12	12	12	32	4	32	12.6	6.3	11
R3007.E-12-14	12	14	32	4	32	12.6	6.3	11