Hubless Chain Sprockets - hubless

aluminium, 6,35mm circular pitch

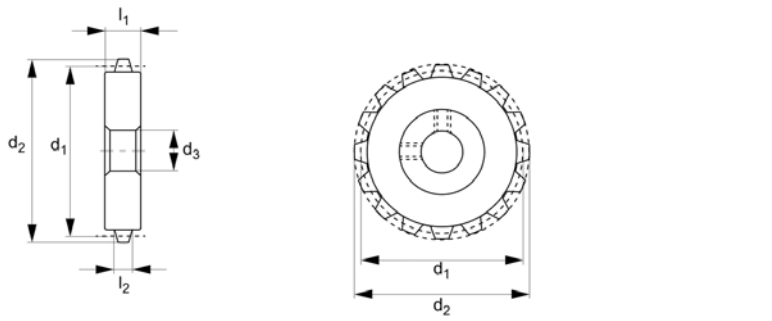

R1067

Material
Aluminium DIN 3,1355 anodized

Technical Notes
[1] Sprockets with Ø19PD and smaller are recommended for idler use only.

Other no's of teeth available on request.

Important Notes
Operates R1065 series chain.

Order No.	No. of teeth	Pitch dia.	Outside dia.
R1067.009-10	9[1]	18.19	21.24
R1067.010-10	10	20.21	23.26
R1067.012-10	12	24.26	27.30
R1067.013-10	13	28.28	29.32
R1067.014-10	14	28.30	31.35
R1067.015-10	15	30.32	33.37
R1067.016-10	16	32.34	35.39
R1067.018-10	18	36.38	39.43
R1067.020-10	20	40.43	43.47
R1067.024-10	24	48.51	51.56
R1067.025-10	25	50.53	53.58
R1067.028-10	28	56.60	59.64
R1067.030-10	30	60.64	63.69
R1067.036-10	36	72.77	75.81
R1067.040-10	40	80.85	83.90
R1067.048-10	48	97.02	100.07
R1067.060-10	60	121.28	124.32
R1067.072-10	72	145.53	148.58