Chain Sprockets - aluminium, hubless

3,747 circular pitch

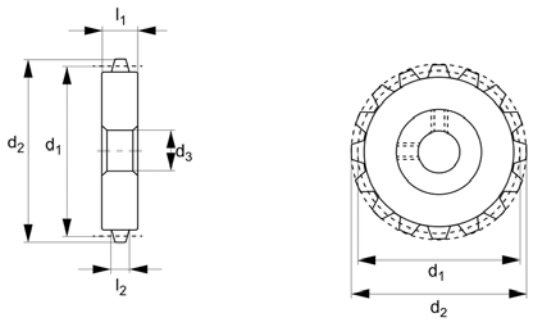

R1057

Material
Aluminium DIN 3,1355 anodized.

Technical Notes
[1]Sprockets with Ø19,0 PD and smaller are recommended for idler use only.

Other no's of teeth available on request.

Important Notes
Operate with R1055 series chain.

Order No.	No. of teeth	Pitch dia.	Outside dia.
R1057.014-HL	14*	16.80	18.82
R1057.015-HL	15*	18.00	20.03
R1057.016-HL	16	19.20	21.23
R1057.018-HL	18	21.60	23.63
R1057.020-HL	20	24.00	26.03
R1057.024-HL	24	28.80	30.83
R1057.025-HL	25	30.00	32.03
R1057.027-HL	27	32.40	34.43
R1057.028-HL	28	33.60	35.63
R1057.029-HL	29	34.80	36.83
R1057.030-HL	30	35.99	38.03
R1057.032-HL	32	38.39	40.43
R1057.034-HL	34	40.79	42.83
R1057.036-HL	36	43.19	45.23
R1057.038-HL	38	45.59	47.63
R1057.040-HL	40	47.99	50.03
R1057.042-HL	42	50.39	52.42
R1057.044-HL	44	52.79	54.82
R1057.048-HL	48	57.59	59.62
R1057.050-HL	50	59.99	62.02
R1057.052-HL	52	62.39	64.42
R1057.054-HL	54	64.79	66.82
R1057.056-HL	56	67.19	69.22
R1057.060-HL	60	71.99	74.02
R1057.065-HL	65	77.99	80.02
R1057.070-HL	70	83.99	86.02
R1057.080-HL	80	95.99	98.02