Countersunk Insert Nuts

A2 stainless

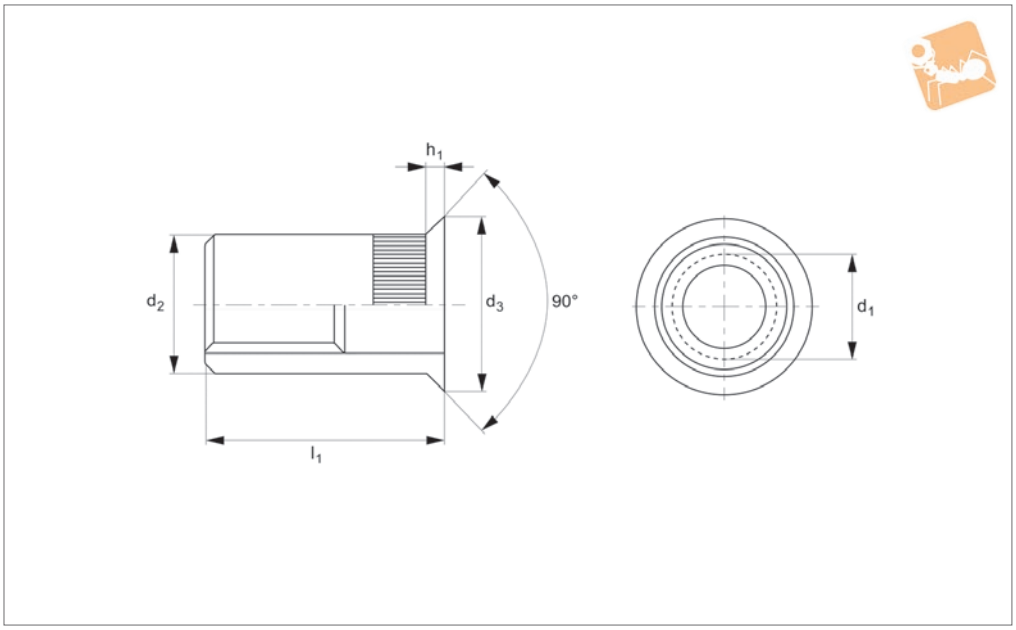

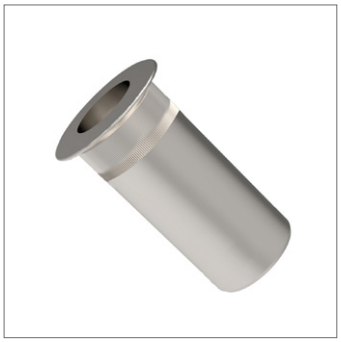

P0821.A2

Material
Stainless steel (A2, AISI 303).

Technical Notes
Knurled body type, plain available on request.
The countersunk head is a stronger type of head and will ensure a flush finish in a countersunk hole. The knurled body provides extra turning resistance.

Tips
Also known as blind rivet nuts or grip nuts.

Important Notes
Lip Height:
M3-M8: 0<1.5
M10:1.5<1.7
M12: 1.7<1.9

Order No.	d_1	Grip range	d_2 +0|-0.2	d_3	h_1	l_1
P0821.030-035-A2	M 3	1,5-3,5	4.9	7.5	1.5	11.5
P0821.040-040-A2	M 4	1,5-4,0	5.9	8.5	1.5	12.5
P0821.050-040-A2	M 5	1,5-4,0	6.9	9.5	1.5	13.5
P0821.050-065-A2	M 5	4,0-6,5	6.9	9.5	1.5	16.0
P0821.060-045-A2	M 6	1,5-4,5	8.9	11.5	1.5	16.0
P0821.060-065-A2	M 6	4,0-6,5	8.9	11.5	1.5	18.0
P0821.080-040-A2	M 8	1,5-4,0	10.9	13.5	1.5	18.0
P0821.080-065-A2	M 8	4,0-6,5	10.9	13.5	1.5	21.0
P0821.100-045-A2	M10	2,0-4,5	12.9	15.5	1.8	21.0
P0821.100-075-A2	M10	4,5-7,5	12.9	15.5	1.8	24.0
P0821.120-045-A2	M12	2,0-4,5	15.9	19.0	2.0	24.5
P0821.120-075-A2	M12	4,5-7,5	15.9	19.0	2.0	27.5