Hygienic Screws - Male

304 stainless steel

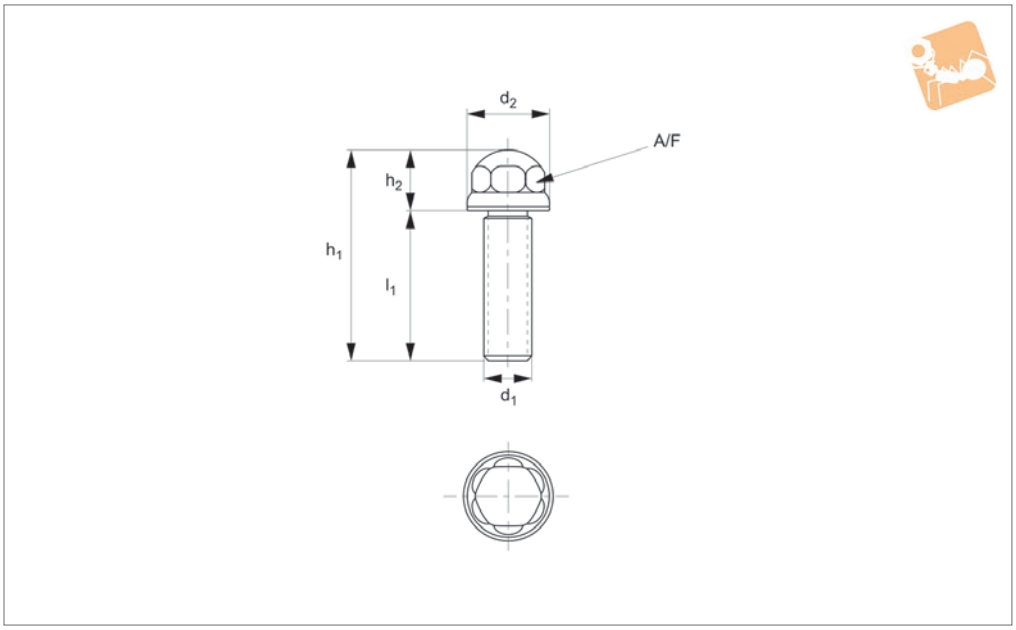

P0490

Material

Stainless steel (AISI 304) high-gloss polished dome-nut, FDA blue silicone gasket, 3-A accepted.

Technical Notes

For use in hygienic areas, components can be mounted without dead spaces. Sealing ring is hydrogenated acrylonitrile butadiene rubber (H-NBR), hardness 85±5 shore A, temp range -25°C to +150°C, blue.

Polished finish Ra < 0,8µ.

Order No.	d_1	d_2	h_1	l_1	h_2	A/F
P0490.050-010	M5x0,8	19	24	10	14	HEX 14
P0490.050-016	M5x0,8	19	26	16	10	HEX 14
P0490.050-020	M5x0,8	19	34	20	14	HEX 14
P0490.060-012	M6x1	19	26	12	14	HEX 14
P0490.060-016	M6x1	19	30	16	14	HEX 14
P0490.060-020	M6x1	19	34	20	14	HEX 14
P0490.060-025	M6x1	19	39	25	14	HEX 14
P0490.060-030	M6x1	19	44	30	14	HEX 14
P0490.080-016	M8x1,25	24	33	16	17	HEX 17
P0490.080-020	M8x1,25	24	37	20	17	HEX 17
P0490.080-025	M8x1,25	24	42	25	17	HEX 17
P0490.080-030	M8x1,25	24	47	30	17	HEX 17
P0490.080-040	M8x1,25	24	57	40	17	HEX 17
P0490.100-020	M10x1,5	24	37	20	17	HEX 17
P0490.100-025	M10x1,5	24	42	25	17	HEX 17
P0490.100-030	M10x1,5	24	47	30	17	HEX 17
P0490.100-040	M10x1,5	24	57	40	17	HEX 17
P0490.100-050	M10x1,5	24	67	50	17	HEX 17
P0490.120-020	M12x1,75	24	27	20	7	HEX 17
P0490.120-025	M12x1,75	24	42	25	17	HEX 17
P0490.120-030	M12x1,75	24	47	30	17	HEX 17
P0490.120-040	M12x1,75	24	57	40	17	HEX 17
P0490.120-050	M12x1,75	24	67	50	17	HEX 17
P0490.160-030	M16x2	30	52	30	22	HEX 22
P0490.160-040	M16x2	30	62	40	22	HEX 22
P0490.160-050	M16x2	30	72	50	22	HEX 22
P0490.160-060	M16x2	30	82	60	22	HEX 22
P0490.160-070	M16x2	30	92	70	22	HEX 22
P0490.160-080	M16x2	30	102	80	22	HEX 22
P0490.200-030	M20x2,5	35	56	30	26	HEX 27
P0490.200-040	M20x2,5	35	66	40	26	HEX 27
P0490.200-050	M20x2,5	35	76	50	26	HEX 27

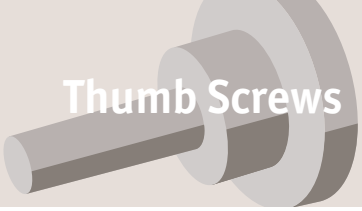

Hygienic Screws - Male

304 stainless steel

Order No.	d_1	d_2	h_1	l_1	h_2	A/F
P0490.200-060	M20x2,5	35	86	60	26	HEX 27
P0490.200-070	M20x2,5	35	96	70	26	HEX 27
P0490.200-080	M20x2,5	35	106	80	26	HEX 27