Full Nuts Coarse Thread

Brass

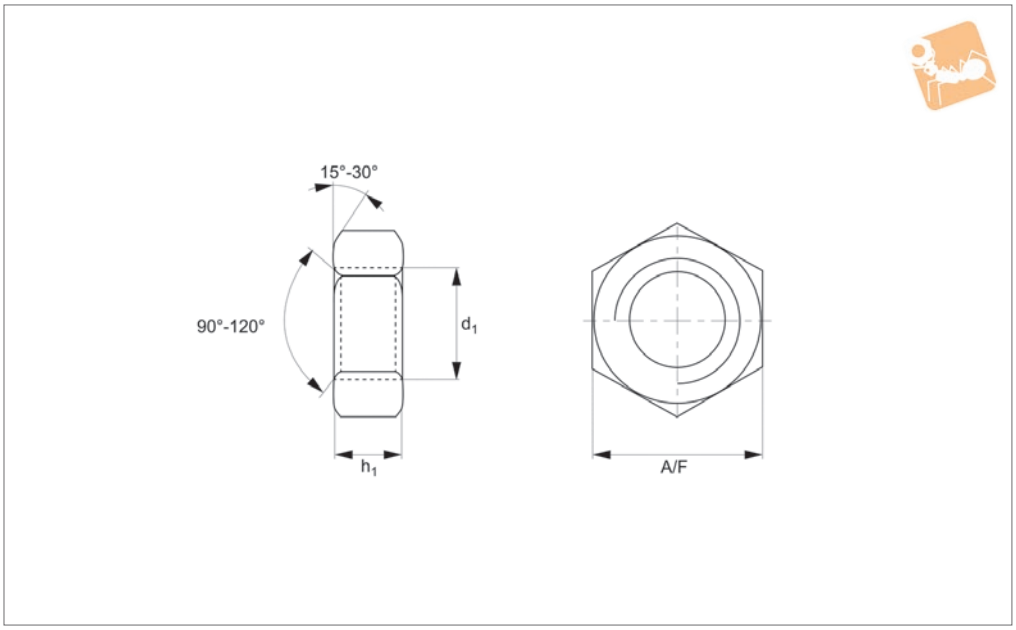

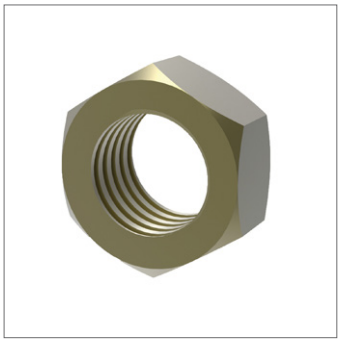

P0301.BR

Material
Brass.

Technical Notes
To DIN 934. Standard metric coarse pitch threads.
For fine thread full nuts see P0302.

Order No.	d_1	h_1 min.	A/F	Material
P0301.020-BR	M 2	1.35	4	Brass
P0301.030-BR	M 3	2.15	5.5	Brass
P0301.040-BR	M 4	2.9	7	Brass
P0301.050-BR	M 5	3.7	8	Brass
P0301.060-BR	M 6	4.7	10	Brass
P0301.080-BR	M 8	6.14	13	Brass
P0301.100-BR	M10	7.64	17	Brass
P0301.120-BR	M12	9.64	19	Brass
P0301.140-BR	M14	10.3	22	Brass
P0301.160-BR	M16	12.3	24	Brass
P0301.180-BR	M18	14.3	27	Brass
P0301.200-BR	M20	14.9	30	Brass
P0301.220-BR	M22	16.9	32	Brass
P0301.240-BR	M24	17.7	36	Brass
P0301.270-BR	M27	20.7	41	Brass
P0301.300-BR	M30	22.7	46	Brass
P0301.360-BR	M36	27.4	55	Brass
P0301.390-BR	M39	29.4	60	Brass
P0301.035-BR	M3,5	2.55	6	Brass
P0301.070-BR	M 7	5.5	11	Brass
P0301.025-BR	M2,5	1.75	5	Brass