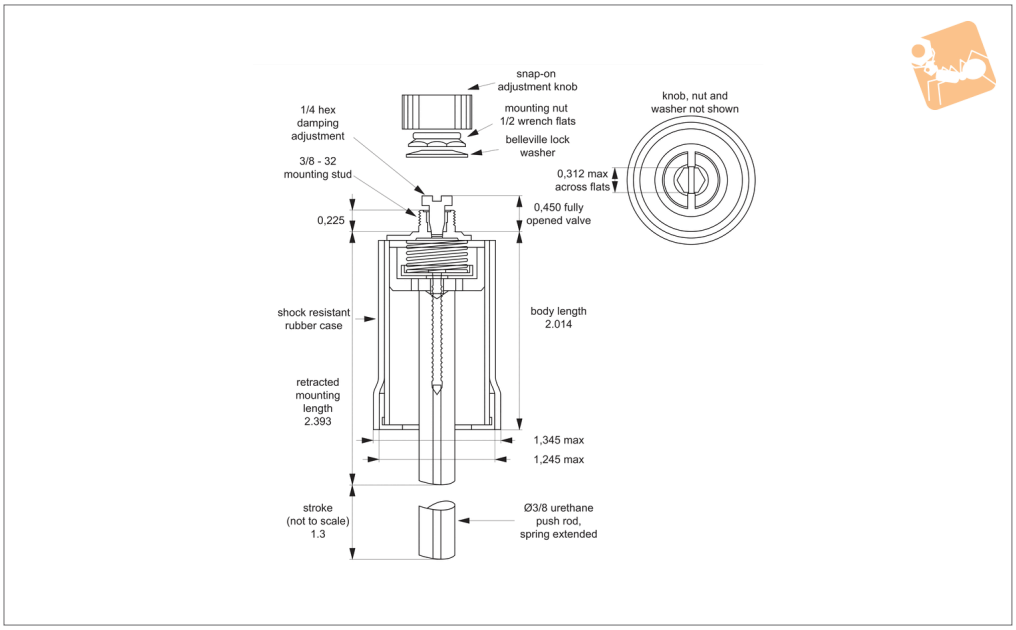

L4622

Material

Shock resistant rubber case.
Urethane push rod.
Pyrex glass cylinder.

Technical Notes

Max operating temperature: -55°c to +150°c.
(Please advise if operating at temperatures over +70°c).
Piston friction force without side load = less than 1 gram.

Mounting data:
Mounting hole:
Rectangular: 0.312" x 0.375" (8mm x 10mm)
Round: 0.375" (10mm)
Suggested mounting bracket thickness: 0.060" - 0.125" (1.52 - 3.18mm)
Mounting nut torque:
Head: 4-8 in-lb (0.45 to 0.90 Nm)
Level of shock absorption adjustable by hand.

Order No.	Stroke	Energy capacity ft·lb	Spring force extended lb	Spring force retracted lb	Push rod reset time with valve fully open m/s	Push rod reset time with valve fully closed m/s	Friction coefficient
L4622.945	1,3	0-0,75	0,13	0,27	60	90	0,2