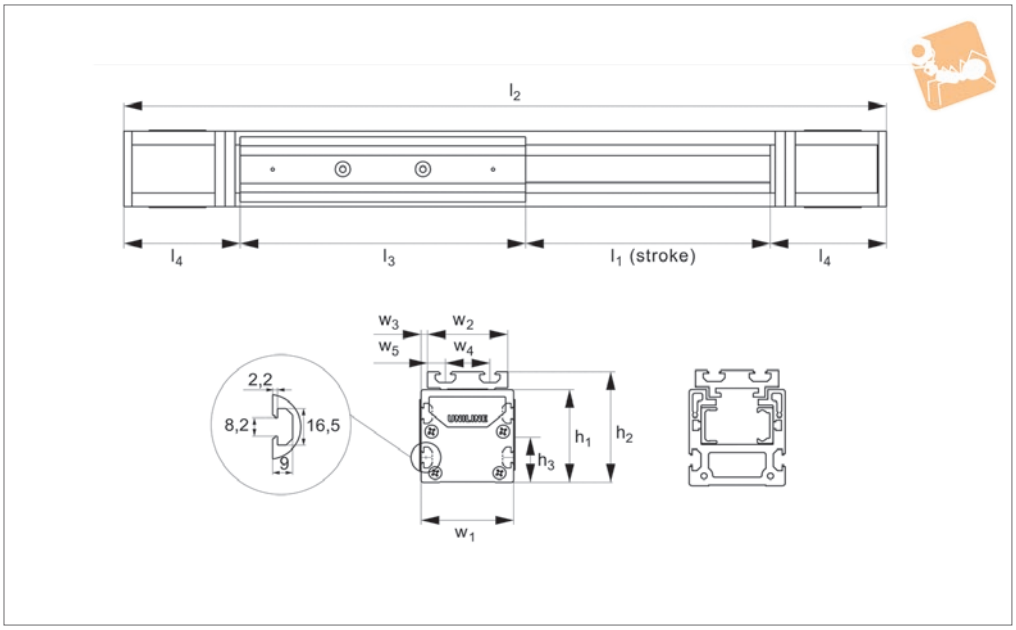

L3003.C75

Material
Special sliders on a pair of hardened steel rails, encased in an aluminium profile.

Technical Notes
Any length overall stroke unit can be supplied (up to 3,0 metres in a single section) for the C75 series. Longer strokes available.
Longer carriages and double carriages are available which increase the load capacity of the units.

Tips
See technical pages for more information on belt specification, long carriages, double carriages and motor connections.
Can easily be combined to make an XY, XYZ or other set up gantry system.

Important Notes
For loads with significant M_y moment loads.

Order No.	l_1	l_2	h_3	l_3	h_1 & w_1	h_2	l_4	w_2	w_3	w_4	w_5	C_{0ax} N	C_{0rad} N	M_x Nm	M_y Nm	M_z Nm
L3003.C75-0100	100	617	20	285	75	90	116	65	5	36	14.5	4350	750	85.2	217	36.1
L3003.C75-0200	200	717	20	285	75	90	116	65	5	36	14.5	4350	750	85.2	217	36.1
L3003.C75-0300	300	817	20	285	75	90	116	65	5	36	14.5	4350	750	85.2	217	36.1
L3003.C75-0400	400	917	20	285	75	90	116	65	5	36	14.5	4350	750	85.2	217	36.1
L3003.C75-0500	500	1017	20	285	75	90	116	65	5	36	14.5	4350	750	85.2	217	36.1
L3003.C75-0600	600	1117	20	285	75	90	116	65	5	36	14.5	4350	750	85.2	217	36.1
L3003.C75-0700	700	1217	20	285	75	90	116	65	5	36	14.5	4350	750	85.2	217	36.1
L3003.C75-0800	800	1317	20	285	75	90	116	65	5	36	14.5	4350	750	85.2	217	36.1
L3003.C75-0900	900	1417	20	285	75	90	116	65	5	36	14.5	4350	750	85.2	217	36.1
L3003.C75-1000	1000	1517	20	285	75	90	116	65	5	36	14.5	4350	750	85.2	217	36.1
L3003.C75-1100	1100	1617	20	285	75	90	116	65	5	36	14.5	4350	750	85.2	217	36.1
L3003.C75-1200	1200	1717	20	285	75	90	116	65	5	36	14.5	4350	750	85.2	217	36.1
L3003.C75-1300	1300	1817	20	285	75	90	116	65	5	36	14.5	4350	750	85.2	217	36.1
L3003.C75-1400	1400	1917	20	285	75	90	116	65	5	36	14.5	4350	750	85.2	217	36.1
L3003.C75-1500	1500	2017	20	285	75	90	116	65	5	36	14.5	4350	750	85.2	217	36.1
L3003.C75-1600	1600	2117	20	285	75	90	116	65	5	36	14.5	4350	750	85.2	217	36.1
L3003.C75-1700	1700	2217	20	285	75	90	116	65	5	36	14.5	4350	750	85.2	217	36.1
L3003.C75-1800	1800	2317	20	285	75	90	116	65	5	36	14.5	4350	750	85.2	217	36.1
L3003.C75-1900	1900	2417	20	285	75	90	116	65	5	36	14.5	4350	750	85.2	217	36.1
L3003.C75-2000	2000	2517	20	285	75	90	116	65	5	36	14.5	4350	750	85.2	217	36.1
L3003.C75-2100	2100	2617	20	285	75	90	116	65	5	36	14.5	4350	750	85.2	217	36.1
L3003.C75-2200	2200	2717	20	285	75	90	116	65	5	36	14.5	4350	750	85.2	217	36.1
L3003.C75-2300	2300	2817	20	285	75	90	116	65	5	36	14.5	4350	750	85.2	217	36.1
L3003.C75-2400	2400	2917	20	285	75	90	116	65	5	36	14.5	4350	750	85.2	217	36.1
L3003.C75-2500	2500	3017	20	285	75	90	116	65	5	36	14.5	4350	750	85.2	217	36.1
L3003.C75-2600	2600	3117	20	285	75	90	116	65	5	36	14.5	4350	750	85.2	217	36.1
L3003.C75-2700	2700	3217	20	285	75	90	116	65	5	36	14.5	4350	750	85.2	217	36.1
L3003.C75-2800	2800	3317	20	285	75	90	116	65	5	36	14.5	4350	750	85.2	217	36.1
L3003.C75-2900	2900	3417	20	285	75	90	116	65	5	36	14.5	4350	750	85.2	217	36.1
L3003.C75-3000	3000	3517	20	285	75	90	116	65	5	36	14.5	4350	750	85.2	217	36.1