40Ø Shaft Support Rails

complete stainless and aluminium support

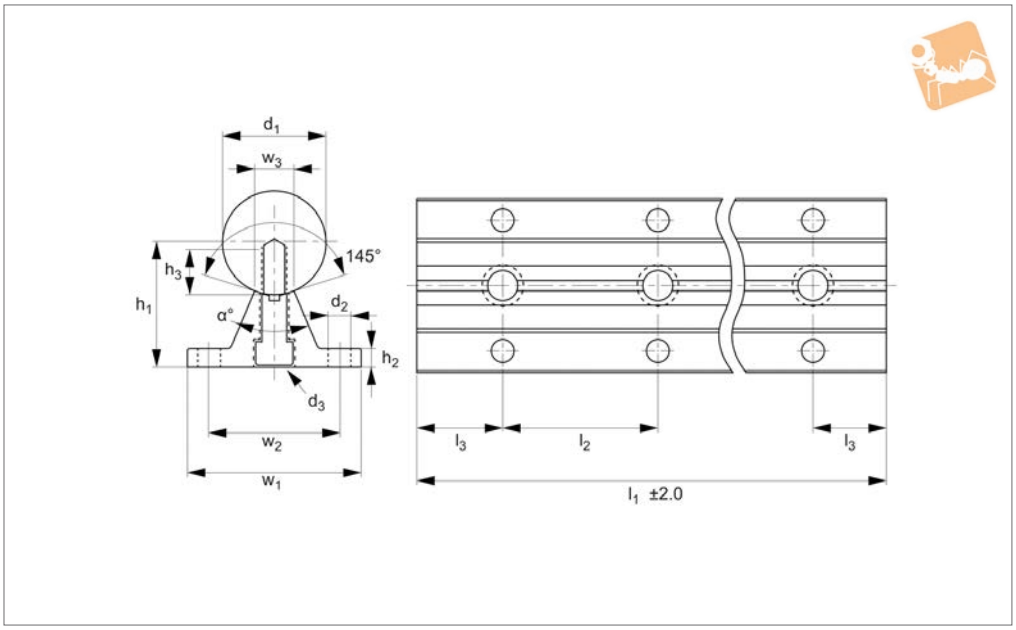

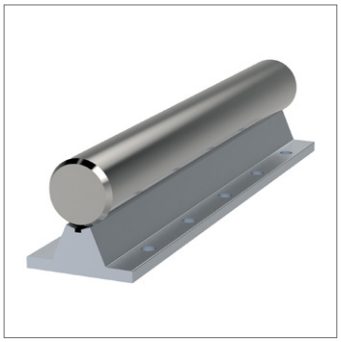

L1781.40

Material

Hardened and ground stainless steel shaft (440C), aluminium alloy support rail. Surface hardness of shaft 60-65 HRC.

Technical Notes

For open linear bushings, ensures a very rigid and stiff system.

The shaft is pre-mounted to the shaft support rail.
Standard lengths are shown which allow the distance to the first and last hole to be equal (ie $l_2/2$). Different holes pitches available on request.
Straightness: ±0.1mm/metre.

Tips

For linear carriages see part no. L1755 (flanged) or L1752 (unflanged).
Stainless steel carriages also available, see part no. L1756 (flanged) or L1753 (unflanged).

Order No.	d_1 tol. h6	d_2	d_3	l_1	l_2	l_3	w_1	w_2	w_3	h_1 ±0.02	h_2	h_3	α °
L1781.40-0600	40	9	M10x40	600	300	150	73	55	15	50	8	19	50
L1781.40-0900	40	9	M10x40	900	300	150	73	55	15	50	8	19	50
L1781.40-1200	40	9	M10x40	1200	300	150	73	55	15	50	8	19	50
L1781.40-1500	40	9	M10x40	1500	300	150	73	55	15	50	8	19	50
L1781.40-1800	40	9	M10x40	1800	300	150	73	55	15	50	8	19	50
L1781.40-2100	40	9	M10x40	2100	300	150	73	55	15	50	8	19	50
L1781.40-2400	40	9	M10x40	2400	300	150	73	55	15	50	8	19	50
L1781.40-2700	40	9	M10x40	2700	300	150	73	55	15	50	8	19	50
L1781.40-3000	40	9	M10x40	3000	300	150	73	55	15	50	8	19	50
L1781.40-3300	40	9	M10x40	3300	300	150	73	55	15	50	8	19	50
L1781.40-3600	40	9	M10x40	3600	300	150	73	55	15	50	8	19	50
L1781.40-3900	40	9	M10x40	3900	300	150	73	55	15	50	8	19	50
L1781.40-4200	40	9	M10x40	4200	300	150	73	55	15	50	8	19	50
L1781.40-4500	40	9	M10x40	4500	300	150	73	55	15	50	8	19	50
L1781.40-4800	40	9	M10x40	4800	300	150	73	55	15	50	8	19	50
L1781.40-5100	40	9	M10x40	5100	300	150	73	55	15	50	8	19	50
L1781.40-5400	40	9	M10x40	5400	300	150	73	55	15	50	8	19	50
L1781.40-5700	40	9	M10x40	5700	300	150	73	55	15	50	8	19	50
L1781.40-6000	40	9	M10x40	6000	300	150	73	55	15	50	8	19	50

40Ø Shaft Support Rails
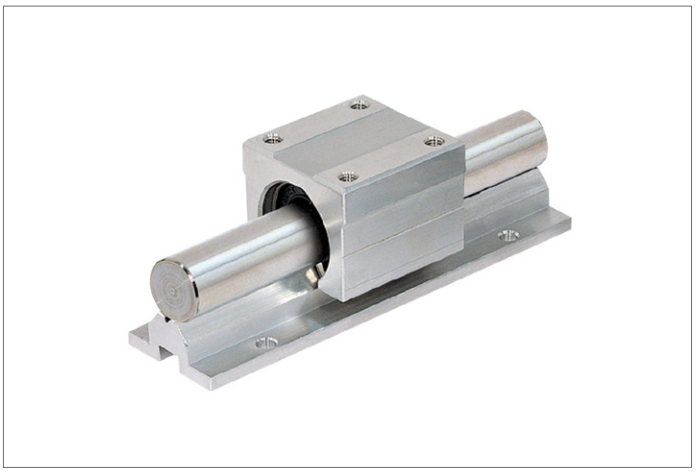
complete stainless and aluminium support