80Ø Shaft Support Rails

complete steel shaft and aluminium support

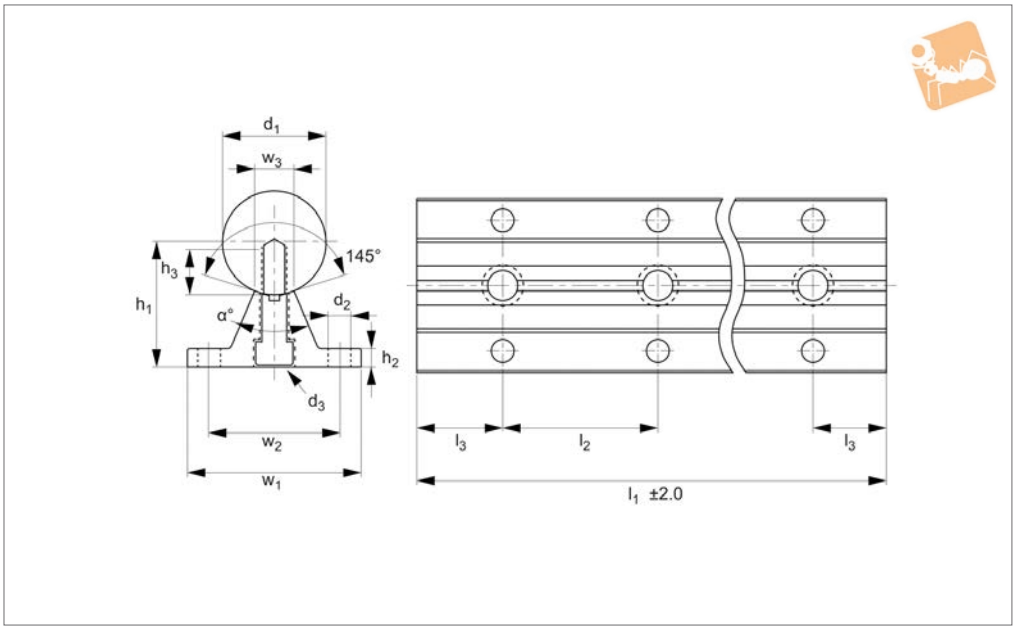

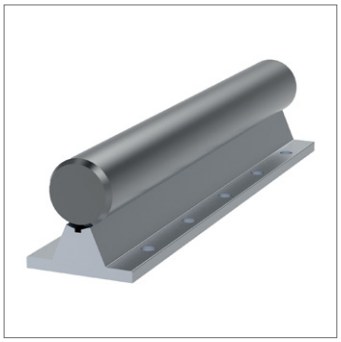

L1780.80

Material

Hardened and ground carbon steel shaft (070M55, Cf53 - DIN 1.1213), aluminium alloy support rail.
Surface hardness of steel shaft 60-65 HRC.

Technical Notes

For open linear bushings, ensures a very rigid and stiff system.

The shaft is pre-mounted to the shaft support rail.
Standard lengths are shown which allow the distance to the first and last hole to be equal (ie $l_2/2$). Different holes pitches available on request.
Straightness: ±0.1mm/metre.

Tips

For linear carriages see part no. L1755 (flanged) or L1752 (unflanged).
Stainless steel carriages also available, see part no. L1756 (flanged) or L1753 (unflanged).
On request a stainless steel (usually 440C) shaft can be mounted on the support rail.

Order No.	d_1 tol. h6	d_2	d_3	l_1	l_2	l_3	w_1	w_2	w_3	h_1 ±0.02	h_2	h_3	α °
L1780.80-0600	80	13.5	M16x60	600	300	150	116	92	34	86	12	28	46
L1780.80-0900	80	13.5	M16x60	900	300	150	116	92	34	86	12	28	46
L1780.80-1200	80	13.5	M16x60	1200	300	150	116	92	34	86	12	28	46
L1780.80-1500	80	13.5	M16x60	1500	300	150	116	92	34	86	12	28	46
L1780.80-1800	80	13.5	M16x60	1800	300	150	116	92	34	86	12	28	46
L1780.80-2100	80	13.5	M16x60	2100	300	150	116	92	34	86	12	28	46
L1780.80-2400	80	13.5	M16x60	2400	300	150	116	92	34	86	12	28	46
L1780.80-2700	80	13.5	M16x60	2700	300	150	116	92	34	86	12	28	46
L1780.80-3000	80	13.5	M16x60	3000	300	150	116	92	34	86	12	28	46
L1780.80-3300	80	13.5	M16x60	3300	300	150	116	92	34	86	12	28	46
L1780.80-3600	80	13.5	M16x60	3600	300	150	116	92	34	86	12	28	46
L1780.80-3900	80	13.5	M16x60	3900	300	150	116	92	34	86	12	28	46
L1780.80-4200	80	13.5	M16x60	4200	300	150	116	92	34	86	12	28	46
L1780.80-4500	80	13.5	M16x60	4500	300	150	116	92	34	86	12	28	46
L1780.80-4800	80	13.5	M16x60	4800	300	150	116	92	34	86	12	28	46
L1780.80-5100	80	13.5	M16x60	5100	300	150	116	92	34	86	12	28	46
L1780.80-5400	80	13.5	M16x60	5400	300	150	116	92	34	86	12	28	46
L1780.80-5700	80	13.5	M16x60	5700	300	150	116	92	34	86	12	28	46
L1780.80-6000	80	13.5	M16x60	6000	300	150	116	92	34	86	12	28	46

80Ø Shaft Support Rails
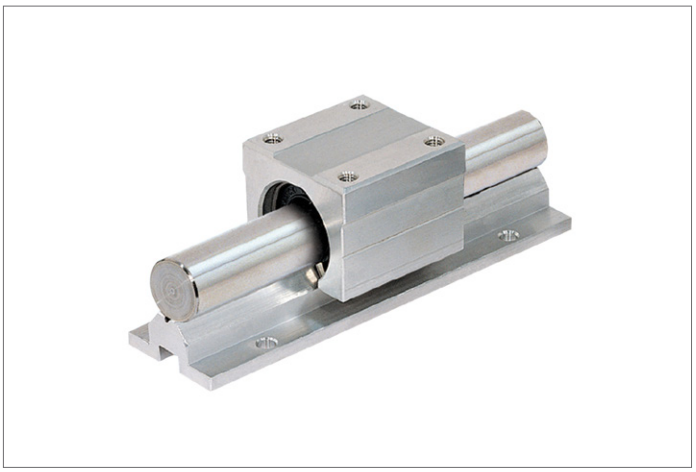
complete steel shaft and aluminium support