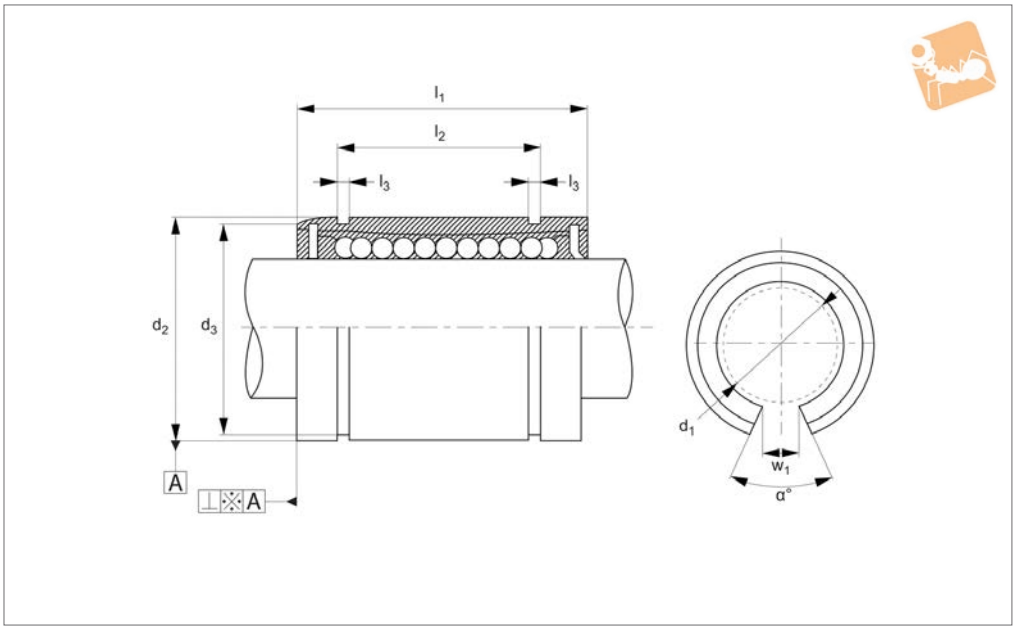

L1710

Material
Stainless steel body (440C) with either a resin (POM) or stainless steel (316) retainer.
Stainless steel balls (440C).

Supplied with nitrile rubber (NBR) end seals.

Technical Notes
For use with corrosion resistant hardened shafts (see part no. L1772) - tolerance h6.
Perpendicularity A is better than 15µ.
Temperature range: For resin ball cage -20°C to +80°C.
For stainless ball cage -20°C to +120°C.

Order No.	Ball cage	d_1 tol. h6	d_2 tol. h6	l_1	l_2	l_3	d_3	w_1	Dyn. load C N max.	α °	No. of ball circuits	Static load C_0 N max.	Weight g
L1710.012-RS	Resin	12	22	32	22.9	1.30	21.0	7.5	510	78	3	784	35
L1710.016-RS	Resin	16	26	36	24.9	1.30	24.9	10.0	578	78	3	892	48
L1710.020-RS	Resin	20	32	45	31.5	1.60	30.3	10.0	862	60	4	1370	84
L1710.025-RS	Resin	25	40	58	44.1	1.85	37.5	12.5	980	60	5	1570	195
L1710.012-SS	St. Steel	12	22	32	22.9	1.30	21.0	7.5	510	78	3	784	35
L1710.016-SS	St. Steel	16	26	36	24.9	1.30	24.9	10.0	578	78	3	892	48
L1710.020-SS	St. Steel	20	32	45	31.5	1.60	30.3	10.0	862	60	4	1370	84
L1710.025-SS	St. Steel	25	40	58	44.1	1.85	37.5	12.5	980	60	5	1570	195

Linear ball bushings

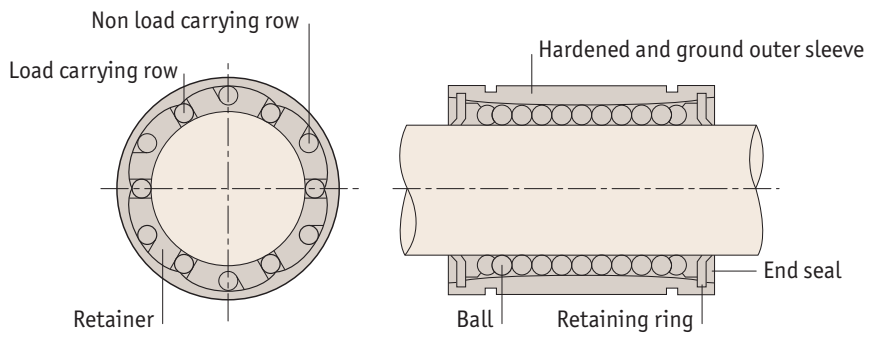

Applications

- Computers and peripheral equipment.
- Recording equipment.
- Linear motion systems.
- Multi-axis drilling machine.
- Printing machines.
- Food packaging machines.
- Punching presses.
- Tool grinders.
- Assembly systems.
- Card selectors.

Interchangeability

Our linear bushing systems are designed to have full interchangeability, with other manufacturers' parts. **For shafting see part numbers L1770 to L1785.**

High precision retainer

The single body retainer guides 4-6 ball circuits. It precisely guides the balls with a smooth motion.

Tolerance of housing bore

Normal fit is standard, pressed fit is for without clearance.

Type	Case	
Part no.	Normal fit	Pressed fit
L1706 to L1733	H7	K6, J6
L1706...$^{-1}$ to L1733...$^{-1}$	H7	J7

Rigid outer sleeve

The hardened and precisely ground outer sleeve is made of bearing steel.

L1750 bushing carriages

Consists of light aluminium case and L1706 type linear bushing, so the installation can be finished simply by bolting. Longer life can be obtained by adjusting the orientation of the ball circuits in the linear carriage element against the direction of load.

Tolerance of shaft

Type	Shaft	
Part no.	Normal fit	Tight fit
L1706 to L1733	h6	k6
L1706...$^{-1}$ to L1733...$^{-1}$	f6, g6	h6

Basic dynamic load rating C

The basic dynamic load rating is defined as the constant load both in direction and magnitude under which a group of identical linear bushings are individually operated. 90% of the units can travel 50Km without failing due to rolling contact fatigue.

Basic static load rating C_0

If a linear bushing is subject to an excessive load or impact, a permanent deformation occurs between the raceway and the rolling element. The basic static load rating is defined as the static load that gives a prescribed constant contact stress at the centre of the contact area between the rolling element and raceway receiving the maximum load.

Relationships between load ratings and the position of ball circuits

Load ratings of linear bushing are affected by the position of the ball circuits as shown below.

Load ratings and orientation of balls.

No of ball rows	Orientation of balls	
	Maximum load rating	Minimum load rating
4	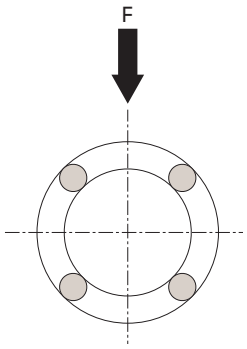	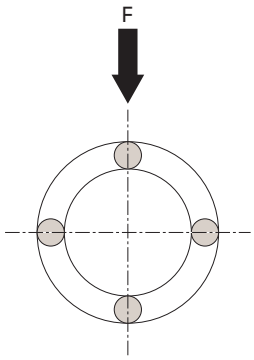
	F = 1.41 x C	F = C
5	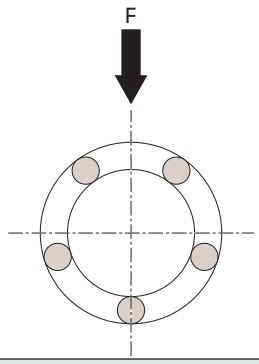	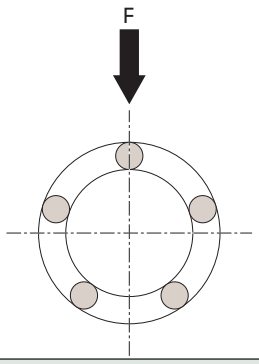
	F = 1.46 x C	F = C
6	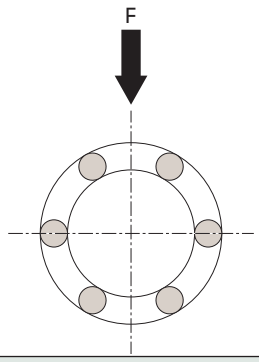	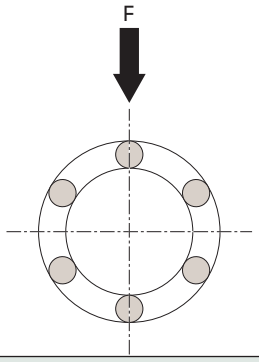
	F = 1.26 x C	F = C

Technical Information

Load rating important information

When designing a linear motion system it is necessary to consider how the application will affect performance. The following examples demonstrate how the position of the load and the centre of gravity can influence product selection. When evaluating your application, review each of the forces acting on your system and determine the product that best suits your needs.

Horizontal application

For uniform speed or when stopped.

$$F_{1Z} = \frac{W}{4} + \left(\frac{W}{2} \cdot \frac{d_2}{d_0}\right) - \left(\frac{W}{2} \cdot \frac{d_3}{d_1}\right)$$

$$F_{2Z} = \frac{W}{4} - \left(\frac{W}{2} \cdot \frac{d_2}{d_0}\right) - \left(\frac{W}{2} \cdot \frac{d_3}{d_1}\right)$$

$$F_{3Z} = \frac{W}{4} - \left(\frac{W}{2} \cdot \frac{d_2}{d_0}\right) + \left(\frac{W}{2} \cdot \frac{d_3}{d_1}\right)$$

$$F_{4Z} = \frac{W}{4} + \left(\frac{W}{2} \cdot \frac{d_2}{d_0}\right) + \left(\frac{W}{2} \cdot \frac{d_3}{d_1}\right)$$

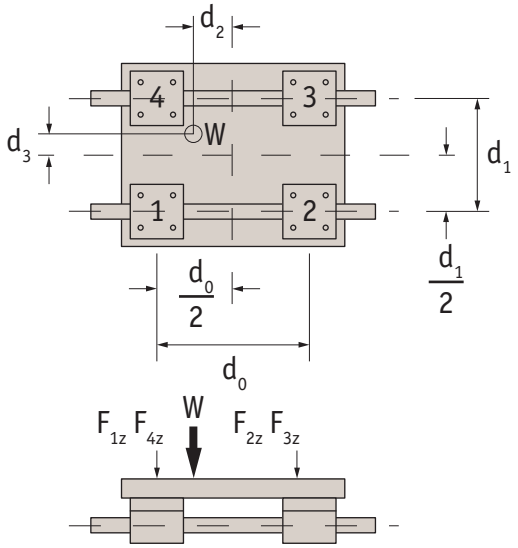

Horizontal application

For uniform speed or when stopped.

$$F_{1Z} = \frac{W}{4} + \left(\frac{W}{2} \cdot \frac{d_2}{d_0}\right) - \left(\frac{W}{2} \cdot \frac{d_3}{d_1}\right)$$

$$F_{2Z} = \frac{W}{4} - \left(\frac{W}{2} \cdot \frac{d_2}{d_0}\right) - \left(\frac{W}{2} \cdot \frac{d_3}{d_1}\right)$$

$$F_{3Z} = \frac{W}{4} - \left(\frac{W}{2} \cdot \frac{d_2}{d_0}\right) + \left(\frac{W}{2} \cdot \frac{d_3}{d_1}\right)$$

$$F_{4Z} = \frac{W}{4} + \left(\frac{W}{2} \cdot \frac{d_2}{d_0}\right) + \left(\frac{W}{2} \cdot \frac{d_3}{d_1}\right)$$

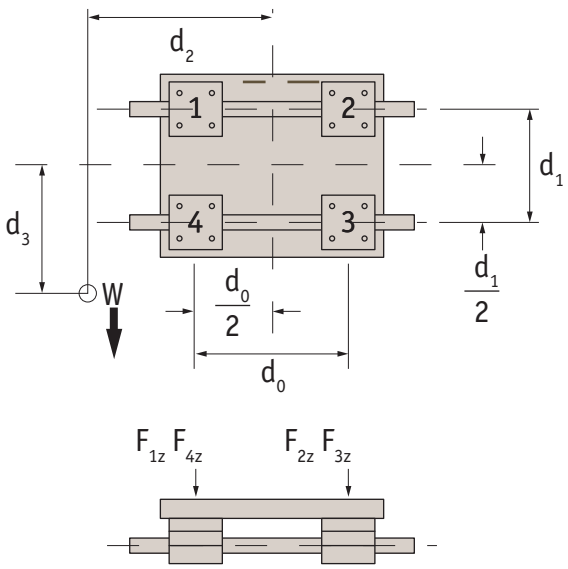

ov-linear-ball-bushings-load-rating-b-lnh - Updated - 22-02-2023

$$F_{1Y} \sim F_{4Y} = \left(\frac{W}{2} \cdot \frac{d_3}{d_0}\right)$$

$$F_{1Z} = F_{4Z} = \frac{W}{4} + \left(\frac{W}{2} \cdot \frac{d_2}{d_0}\right)$$

$$F_{2Z} = F_{3Z} = \frac{W}{4} + \left(\frac{W}{2} \cdot \frac{d_2}{d_0}\right)$$

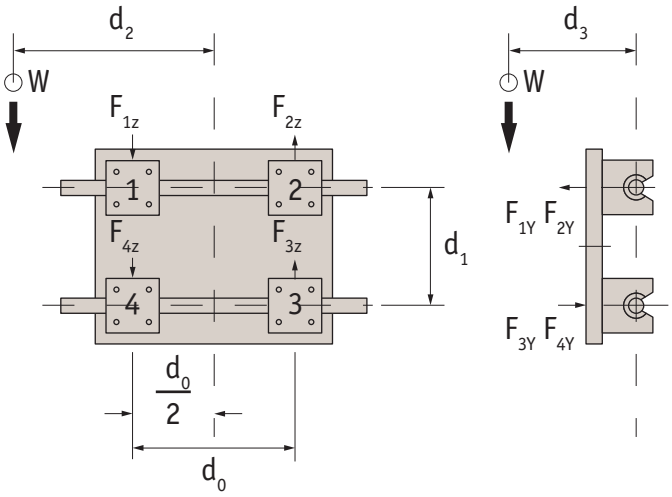

Side mounted application

For uniform speed or when stopped.

$$F_{1X} \sim F_{4X} = \left(\frac{W}{2} \cdot \frac{d_2}{d_0}\right)$$

$$F_{1Y} \sim F_{4Y} = \left(\frac{W}{2} \cdot \frac{d_3}{d_0}\right)$$

$$F_{1X} + F_{4X} \sim F_{2X} + F_{3X}$$

$$F_{1Y} + F_{4Y} \sim F_{2Y} + F_{3Y}$$

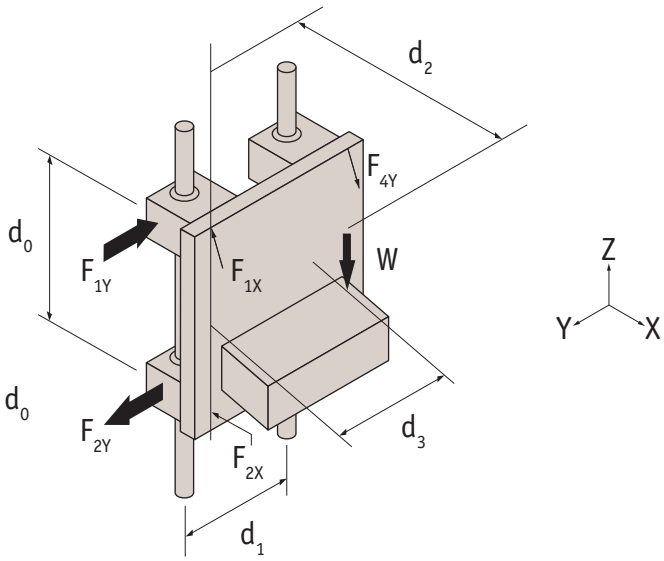

Vertical application

For uniform speed or when stopped. On start up/stop the load varies due to inertia in the system.