Low Profile Crossed Roller Table

aluminium/steel

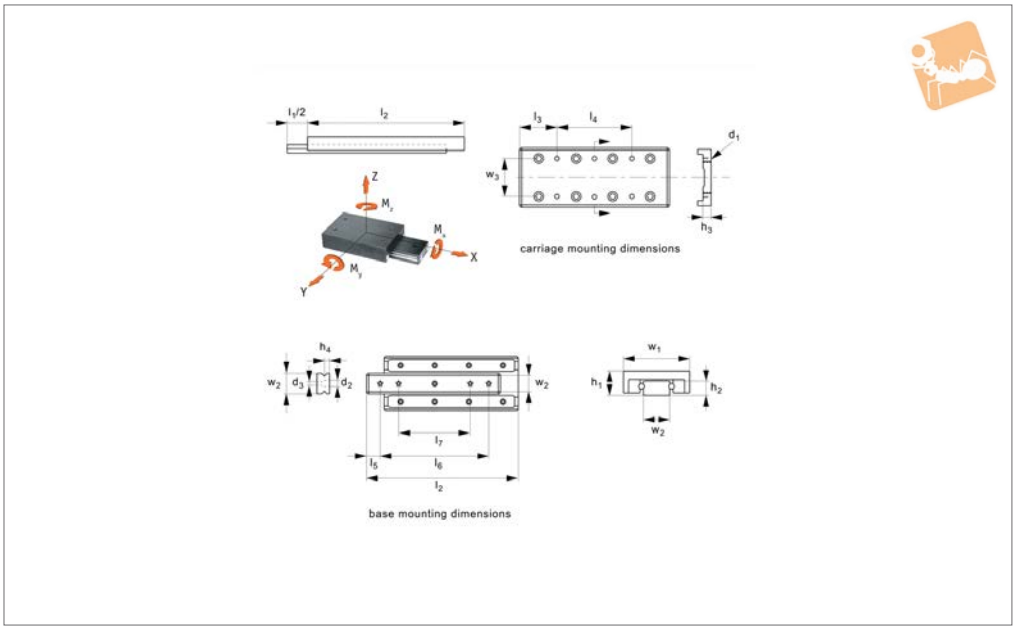

L1027.AL

Material

Aluminium body, black anodised carriage. Hardened chrome steel crossed roller rail set.

Technical Notes

Straight line accuracy: 3µ/25mm of travel.

Positional repeatability: 3µ.
Coefficient of friction: 0,003 typical.

Tips

Stroke is centred on the mid-point of the slides (ie 50% of total stroke each way).

Order No.	Stroke l_1	Load kg max.	w_1 ±0.1	l_2	h_1 ±0.1	h_2	w_2	d_1	No. of carr holes	l_3	l_4	w_3
L1027.020-012-AL	12	23	20	25	8	4	6.6	M2	4	3.5	1x18	14
L1027.020-018-AL	18	32	20	35	8	4	6.6	M2	4	3.5	1x28	14
L1027.020-025-AL	25	47	20	45	8	4	6.6	M2	4	12.5	1x20	14
L1027.020-032-AL	32	54	20	55	8	4	6.6	M2	4	12.5	1x30	14
L1027.020-040-AL	40	60	20	65	8	4	6.6	M2	6	12.5	2x20	14
L1027.020-045-AL	45	73	20	75	8	4	6.6	M2	4	22.5	1x30	14
L1027.020-050-AL	50	79	20	85	8	4	6.6	M2	6	12.5	2x30	14
L1027.030-018-AL	18	40	30	35	12	6	12.0	M4	4	3.5	1x28	22
L1027.030-030-AL	30	63	30	50	12	6	12.0	M4	4	3.5	1x43	22
L1027.030-040-AL	40	75	30	65	12	6	12.0	M4	4	17.5	1x30	22
L1027.030-050-AL	50	95	30	80	12	6	12.0	M4	4	17.5	1x45	22
L1027.030-060-AL	60	105	30	95	12	6	12.0	M4	6	17.5	2x30	22
L1027.030-070-AL	70	120	30	110	12	6	12.0	M4	4	32.5	1x45	22
L1027.030-080-AL	80	130	30	125	12	6	12.0	M4	6	17.5	2x45	22
L1027.040-030-AL	30	126	40	55	16	8	16.0	M5	4	7.5	1x40	30
L1027.040-045-AL	45	183	40	80	16	8	16.0	M5	4	7.5	1x65	30
L1027.040-060-AL	60	220	40	105	16	8	16.0	M5	4	27.5	1x50	30
L1027.040-075-AL	75	275	40	130	16	8	16.0	M5	4	27.5	1x75	30
L1027.040-090-AL	90	310	40	155	16	8	16.0	M5	6	27.5	2x50	30
L1027.040-105-AL	105	355	40	180	16	8	16.0	M5	4	52.5	1x75	30
L1027.040-130-AL	130	375	40	205	16	8	16.0	M5	6	27.5	2x75	30

Order No.	l_5	No. of base holes	h_3	l_6	h_4	l_7	d_2	d_3	Moment M_x Nm max.	Moment M_y Nm max.	Moment M_z Nm max.
L1027.020-012-AL	3.5	2	3.5	18	2.5	-	3.9	2.6	0.80	1.29	1.33
L1027.020-018-AL	5.0	2	3.5	25	2.5	-	3.9	2.6	1.04	2.59	2.71
L1027.020-025-AL	3.5	4	3.5	38	2.5	25	3.9	2.6	1.51	4.55	4.79
L1027.020-032-AL	3.5	4	3.5	48	2.5	29	3.9	2.6	1.74	5.36	5.63
L1027.020-040-AL	5.0	4	3.5	55	2.5	31	3.9	2.6	1.94	8.16	8.33

Low Profile Crossed Roller Table

aluminium/steel

Order No.	l_5	No. of base holes	h_3	l_6	h_4	l_7	d_2	d_3	Moment M_x Nm max.	Moment M_y Nm max.	Moment M_z Nm max.
L1027.020-045-AL	5.0	4	3.5	65	2.5	35	3.9	2.6	2.27	11.5	12.1
L1027.020-050-AL	5.0	4	3.5	75	2.5	40	3.9	2.6	2.55	13.9	14.6
L1027.030-018-AL	5.0	2	5.5	25	3.8	-	6.1	4	2.35	3.06	3.21
L1027.030-030-AL	7.5	2	5.5	35	3.8	-	6.1	4	3.71	6.49	6.80
L1027.030-040-AL	5.0	4	5.5	55	3.8	33	6.1	4	4.41	9.92	10.4
L1027.030-050-AL	5.0	4	5.5	70	3.8	40	6.1	4	5.58	15.3	16.1
L1027.030-060-AL	5.0	4	5.5	85	3.8	45	6.1	4	6.17	20.0	21.0
L1027.030-070-AL	7.5	4	5.5	95	3.8	50	6.1	4	7.05	26.4	27.7
L1027.030-080-AL	7.5	4	5.5	110	3.8	55	6.1	4	7.64	32.4	34.1
L1027.040-030-AL	7.5	2	7.5	40	5.2	-	8.3	5.2	9.87	14.8	15.5
L1027.040-045-AL	6.0	4	7.5	68	5.2	43	8.3	5.2	14.4	31.0	32.6
L1027.040-060-AL	7.5	4	7.5	90	5.2	55	8.3	5.2	17.2	48.5	50.9
L1027.040-075-AL	7.5	4	7.5	115	5.2	65	8.3	5.2	21.5	74.7	78.4
L1027.040-090-AL	7.5	4	7.5	140	5.2	95	8.3	5.2	24.2	100	105
L1027.040-105-AL	7.5	4	7.5	165	5.2	85	8.3	5.2	27.8	136	142
L1027.040-130-AL	7.5	4	7.5	190	5.2	90	8.3	5.2	29.4	158	166

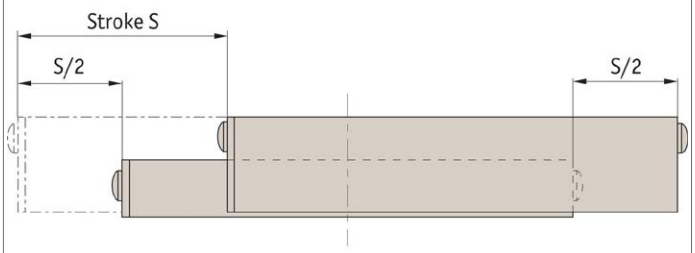

The stroke is centered on the mid point of the slides
(ie 50% of the stroke each way)

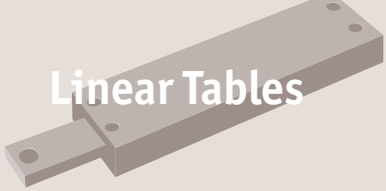

Size + Weight

For light/medium loads

L1020-L1037

For heavy duty loads and motorised

L3000-L3500

Ball roller versions

L1024 - L1038

Needle roller & dovetail stage

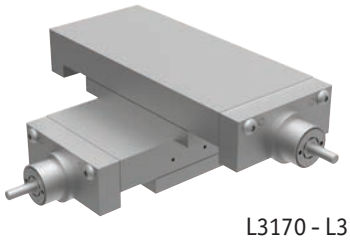

L3170 - L3194

Cross roller versions

L1020 - L1026

Motorised stages

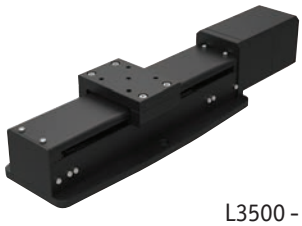

L3500 - L3510

Stainless steel versions

L1022 - L1023

Micrometer driven stages

L3100 - L3123

Linear Tables

Overview

Factors affecting stage selections...

- Size and weight of load
- Moment loads
- Stroke required
- Accuracy required
- Usage conditions of water, chemicals, shock loads etc.

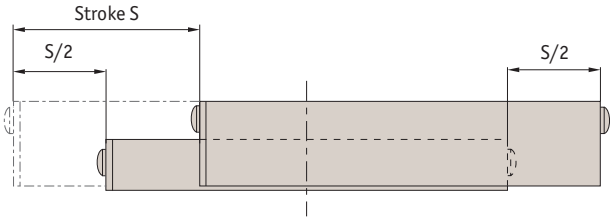

The stroke is centred on the mid point of the slides (i.e. 50% of the stroke each way).

Generally ball slides are less expensive but cross roller slides can carry 8 to 10 times the load of ball slides.

A selection...

L1020 Crossed roller tables	L1022/23 Cross roller table	L1024 Ball slide tables
 Steel and aluminium, accuracy typically 5µ.	 Stainless Steel, accuracy typically 3µ.	 Aluminium, accuracy typically 12µ.
L1026 Crossed roller slide tables	**L1028 Precision ball slide tables**	**L1029 Precision crossed roller tables**
 Aluminium, accuracy typically 5µ.	 Aluminium, accuracy typically 3µ.	 Aluminium, accuracy typically 3µ.
L1034 Flanged ball slide tables - precision	**L1038 Anti-creep ball slide tables**	**L1039 Non-magnetic ball slide**
 With flange accuracy to 1µ.	 Special anti-creep function prevents cage misalignment.	 Non-magnetic accuracy typically 3µ.

Automotion AN ESSENTRA COMPANY
automotioncomponents.co.uk

ov-linear-tables-overview-a-lnh - Updated - 28-02-2023

Steel - L1020

- Standard steel / cast iron

Aluminium - L1021

- Lower weight, lower profile
- Good for high accelerations

Stainless steel - L1022 + L1023

- Stainless steel (440C+Ni) corrosion resistant

Rated life

$$L\,(Km) = \left(\frac{F_t \cdot C}{F_w \, P_c}\right)^{3.33} \times 100$$

F_t = temperature factor
F_w = load factor
C = basic dynamic load (kN) see tables
P_c = radial load (kN)

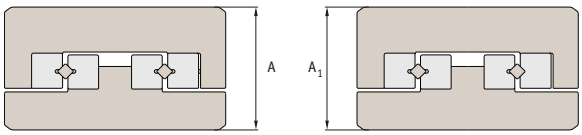

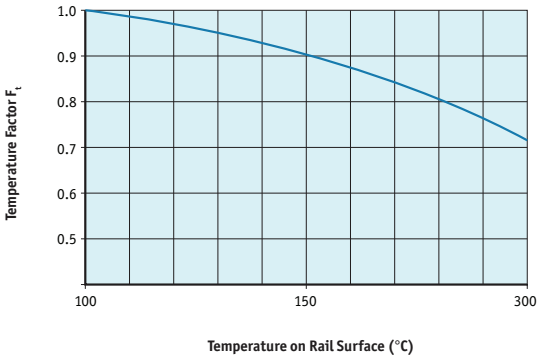

Height tolerance:

- Height ±100µ
- Motorised parts ±10µ
- Strokes from 10 to 950mm
- Loads to 48kN

Load factor F_w

Shock	Speed	F_w
None	Very slow	1.0 - 1.2
Small	Slow	1.2 - 1.5

Cross Roller Linear Tables

Technical

Technical accuracy measurments

- High accuracy.
- Low friction: virtually frictionless. Providing stable performance at lower high speeds.
- Rigid: incorporating cross roller linear rails to provide high load capacity as well as high moment load capacity.
- Installation: easy to install with pre-drilled holes in carriage and base. Ensure mounting surface faces are accurately machined.

Table accuracy (µ)			Rail accuracy (µ)		
Table length	Carriage top parallelism	Carriage side parallelism	N tolerance	M tolerance	Straightness
0-50	2	4	-15 -35	-30 -70	2
50-100	2	5			2
100-150	3	6			3
150-200	3	7			3
200-250	3	7			3
250-300	3	7			3
300-350	4	8			4
350-400	4	8			4
400-450	4	8			4
450-500	4	8			4
500-550	4	9			4
550-600	4	9			4

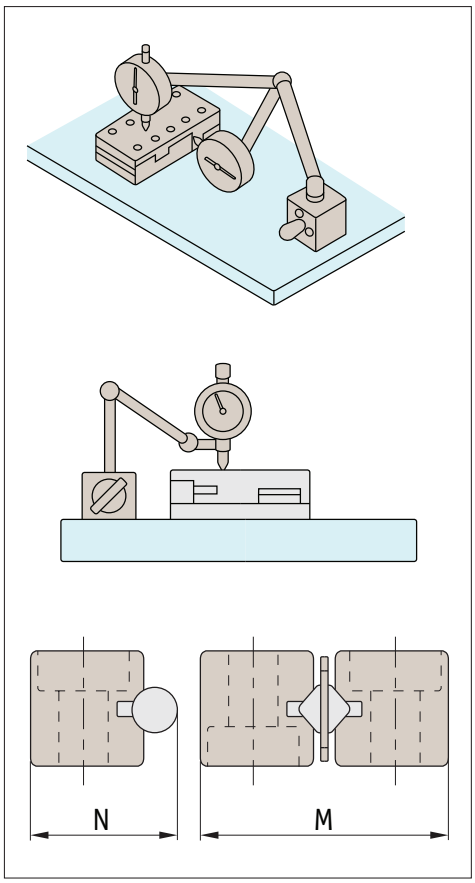

ov-linear-tables-technical-lnh - Updated - 28-02-2023