All of our rod ends incorporate either a plain spherical bearing, ball bearing, or roller bearing. Below is an overview of each type.

Plain spherical bearings

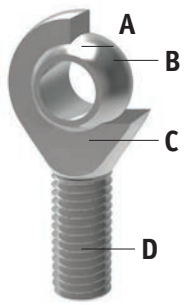

A Made from Polyamid-PTFE-fibreglass-compound, maintenance free, absorbs any foreign particles

B Ball made of bearing steel, hardened, ground, polished and hard chromium plated, ensures reliable corrosion wwprotection

C No clearance - radial clearance 0-10µm

D All rod ends housings made of forged steel, tempered, extremely high loads resistant

Ball and roller bearings

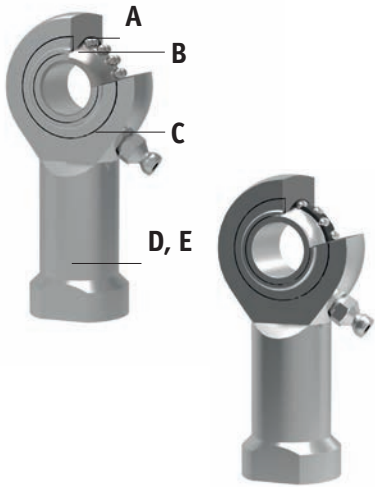

A Radial clearance: 10-30µm, low friction

B Inner ring made of bearing steel, hardened ball grooves polished

C Shields on both sides protect against rough dirt penetration

D All rod ends housings are made of forged steel, case hardened bearing race

E Low maintenance due to long-term greasing, especially suitable for high speed large swiveling angles or rotating movements

Rod ends and water

Stainless steel versions

Most of our rod ends are available in stainless steel as standard

High grade AISI 316 stainless steel available on request

Rod Ends from Automotion Components

Rubber Protector Cap

R3630

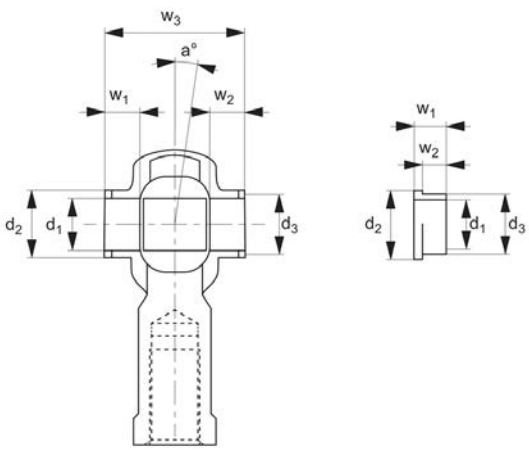

Material
Rubber

Technical Notes
Rubber protector caps for additional protection of rod ends. For use with maintenance free series K rod ends.
Brass spacer bush available on request.
Temperature range: -20°C to + 110°C.

Tips
Mounted easily with retaining pliers.

Order No.	Suitable for steel rod ends	Suitable for stainless steel rod ends	d_1	d_2	d_3	w_1	w_2	w_3	a °	Weight g
R3630.006	R3550/R3551.006	R3565/R3566.006	6	11	8.7	6	4	21	13	3
R3630.008	R3550/R3551.008	R3565/R3566.008	8	12	10.3	6	4	24	14	3
R3630.010	R3550/R3551.010	R3565/R3566.010	10	14	12.5	6	4	26	14	5
R3630.012	R3550/R3551.012	R3565/R3566.012	12	17	15.0	8	6	32	13	5
R3630.014	R3550/R3551.014	R3565/R3566.014	14	19	16.8	8	6	35	16	7
R3630.016	R3550/R3551.016	R3565/R3566.016	16	21	19.0	8	6	37	15	7
R3630.018	R3550/R3551.018	R3565/R3566.018	18	25	21.8	8	6	39	15	7
R3630.020	R3550/R3551.020	R3565/R3566.020	20	28	24.3	10	8	45	15	40
R3630.022	R3550/R3551.022	R3565/R3566.022	22	29	25.7	10	8	48	15	40
R3630.025	R3550/R3551.025	R3565/R3566.025	25	33	29.7	10	8	51	15	40

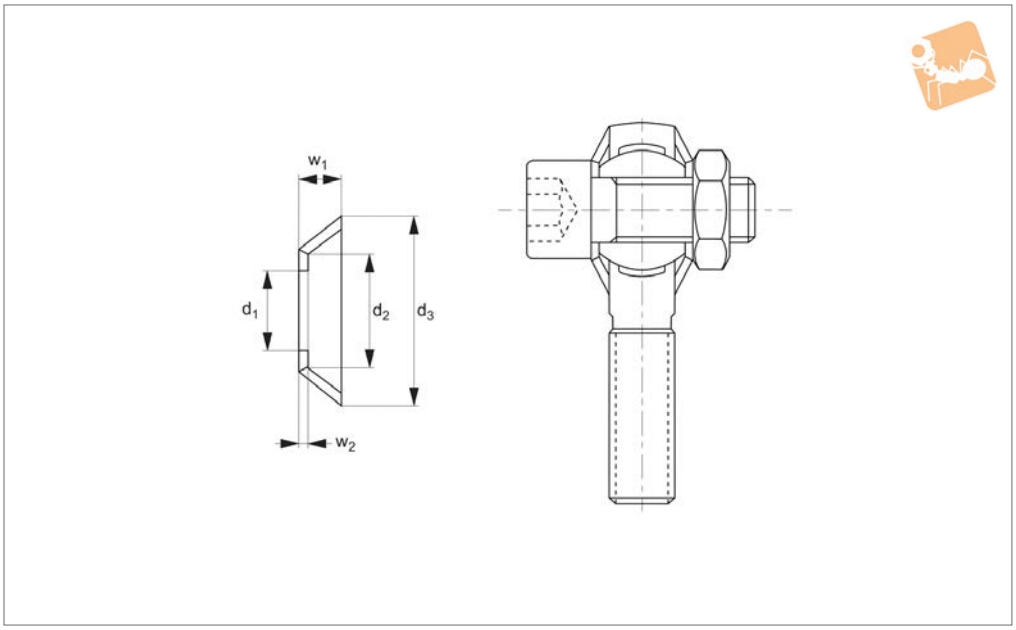

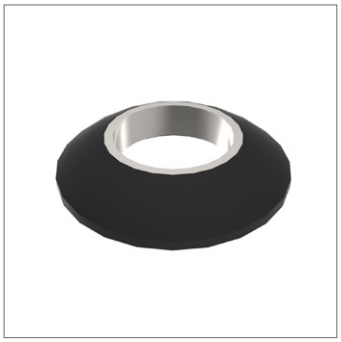

R3631

Material
Seal: neoprene rubber.
Washer: stainless steel.

Technical Notes
Washers for additional protection of bearing for use with series K rod ends.
Consisting of grease, oil, saltwater, as well as several chemicals.
Temperature range -20°C to +110°C

Tips
Before installation, fill cup half full with waterpump grease.

Order No.	Suitable for rod end bore size	d_1 ±0.13	d_2 ±0.13	d_3 ±0.25	w_1 ±0.25	w_2 ±0.13	Weight g
R3631.005	5	5.25	8.28	11.22	2.41	0.50	1
R3631.006	6	6.25	9.53	12.7	3.05	0.69	1
R3631.008	8	8.25	12.37	17.78	5.08	1.20	2
R3631.010	10	10.25	13.46	20.32	5.59	1.20	2
R3631.012	12	12.25	18.54	28.58	6.35	1.20	3
R3631.014	14	14.25	20.32	29.21	6.86	1.20	3
R3631.016	16	16.25	22.4	31.7	6.8	1.20	4
R3631.018	18	18.25	22.6	32.69	8.25	1.20	5
R3631.020	20	20.25	25.15	38.1	10.16	1.20	6
R3631.025	25	25.25	33.8	53.3	12.7	1.50	9
R3631.030	30	30.25	35.56	55.88	19.97	1.53	11

Steel Lock Nuts

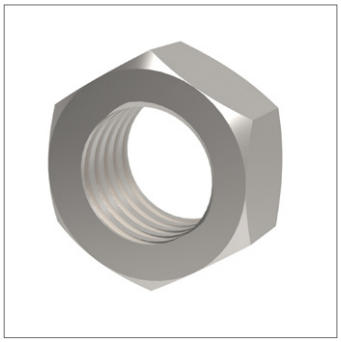

R3670

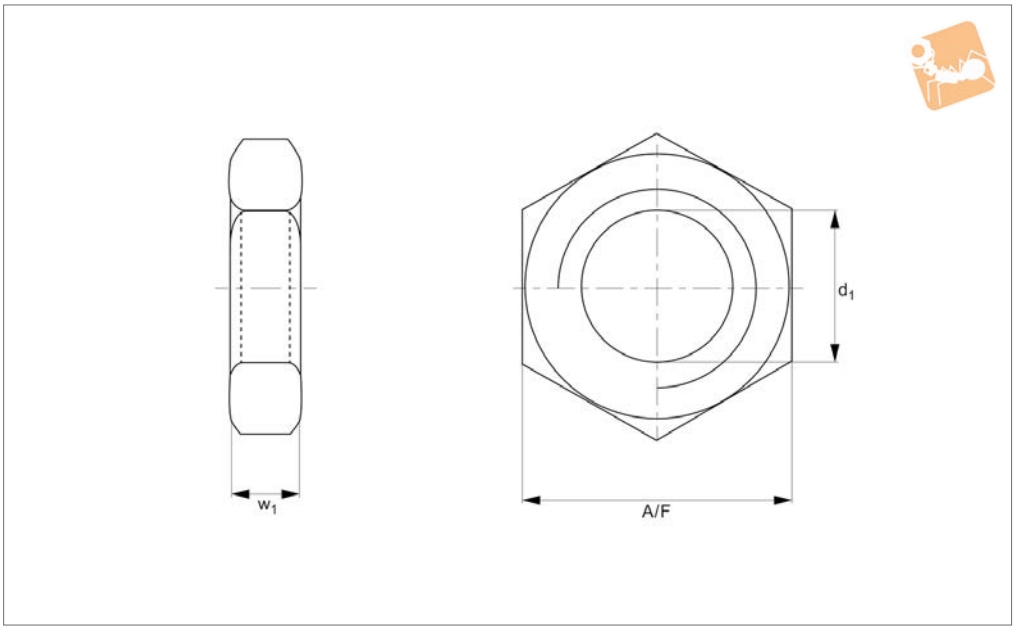

Material
Mild steel, silver zinc plated

Technical Notes
Hexagonal lock nuts to DIN 936

Order No.	Thread hand	d	A/F	w	Weight g
R3670.R005	Right	M5	8	2.7	2
R3670.R006	Right	M6	10	3.2	3
R3670.R008	Right	M8	13	5	4
R3670.R010	Right	M10	17	6	8
R3670.R011	Right	M10x1,25	17	6	8
R3670.R012	Right	M12	19	7	10
R3670.R013	Right	M12x1,25	19	7	10
R3670.R014	Right	M14	22	8	16
R3670.R015	Right	M14x1,5	22	8	16
R3670.R016	Right	M16	24	8	18
R3670.R017	Right	M16x1,5	24	8	18
R3670.R018	Right	M18x1,5	27	9	28
R3670.R020	Right	M20x1,5	30	9	32
R3670.R022	Right	M22x1,5	32	10	40
R3670.R024	Right	M24x2	36	10	52
R3670.R027	Right	M27x2	41	12	102
R3670.R030	Right	M30x2	46	12	102
R3670.R036	Right	M36x3	55	18	175
R3670.R039	Right	M39x3	60	16	240
R3670.R042	Right	M42x3	65	16	290
R3670.R045	Right	M45x3	70	18	380
R3670.R052	Right	M52x3	80	26	535
R3670.R060	Right	M60x4	90	27	860
R3670.L005	Left	M5	8	2.7	2
R3670.L006	Left	M6	10	3.2	3
R3670.L008	Left	M8	13	5	4
R3670.L010	Left	M10	17	6	8
R3670.L011	Left	M10x1,25	17	6	8
R3670.L012	Left	M12	19	7	10
R3670.L013	Left	M12x1,25	19	7	10
R3670.L014	Left	M14	22	8	16
R3670.L015	Left	M14x1,5	22	8	16
R3670.L016	Left	M16	24	8	18
R3670.L017	Left	M16x1,5	24	8	18

Order No.	Thread hand	d	A/F	w	Weight g
R3670.L018	Left	M18x1,5	27	9	28
R3670.L020	Left	M20x1,5	30	9	32
R3670.L022	Left	M22x1,5	32	10	40
R3670.L024	Left	M24x2	36	10	52
R3670.L027	Left	M27x2	41	12	102
R3670.L030	Left	M30x2	46	12	102
R3670.L036	Left	M36x3	55	18	175
R3670.L039	Left	M39x3	60	16	240
R3670.L042	Left	M42x3	65	16	290
R3670.L045	Left	M45x3	70	18	380
R3670.L052	Left	M52x3	80	26	535
R3670.L060	Left	M60x4	90	27	860

Stainless Lock Nuts

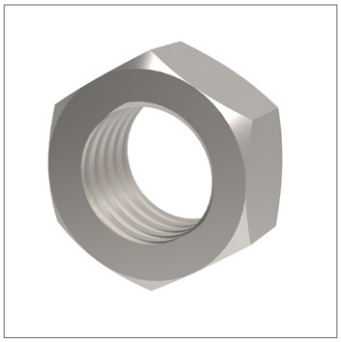

R3671

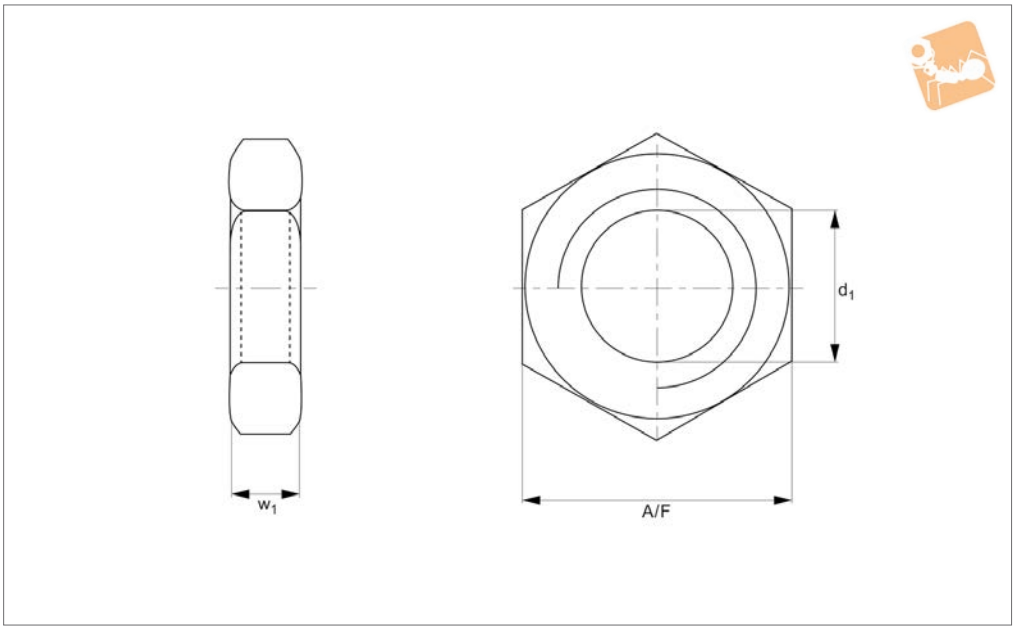

Material
Stainless steel (A2)

8675 (DIN 439/936)

Technical Notes
Hexagonal lock nuts similar to ISO 4035/

Tips
Stainless steel (A4) available on request.

Order No.	Thread hand	d	A/F	w	Weight g
R3671.R005	Right	M5	8	2.7	2
R3671.R006	Right	M6	10	3.2	3
R3671.R008	Right	M8	13	4	4
R3671.R009	Right	M8x1,0	13	4	4
R3671.R010	Right	M10	17	5	8
R3671.R011	Right	M10x1,25	17	6	8
R3671.R012	Right	M12	19	6	10
R3671.R013	Right	M12x1,25	19	6	10
R3671.R014	Right	M14	22	7	18
R3671.R015	Right	M14x1,5	22	7	18
R3671.R016	Right	M16	24	8	20
R3671.R017	Right	M16x1,5	24	8	20
R3671.R018	Right	M18	27	9	30
R3671.R019	Right	M18x1,5	27	9	30
R3671.R020	Right	M20	30	10	32
R3671.R021	Right	M20x1,5	30	10	32
R3671.R022	Right	M22	34	11	40
R3671.R023	Right	M22x1,5	34	11	40
R3671.R024	Right	M24	36	12	52
R3671.R025	Right	M24x2,0	36	12	52
R3671.R027	Right	M27	41	13.5	90
R3671.R028	Right	M27x2,0	41	13.5	90
R3671.R030	Right	M30	46	15	110
R3671.R031	Right	M30x2,0	46	15	110
R3671.R033	Right	M33	50	16.5	155
R3671.R036	Right	M36	55	18	190
R3671.L006	Left	M6	10	4	3
R3671.L008	Left	M8	13	5	4
R3671.L010	Left	M10	17	6	8
R3671.L012	Left	M12	19	7	10
R3671.L016	Left	M16	24	8	20
R3671.L020	Left	M20	30	9	32

Order No.	Thread hand	d	A/F	w	Weight g
R3671.L022	Left	M24	32	10	40
R3671.L030	Left	M30	46	15	110
R3671.L036	Left	M36	55	18	190

Pages 106 - 109

Heavy Duty Rod Ends - integral spherical plain bearing

Male and female series K rod ends, maintenance free. These are our most popular range of heavy duty rod ends.

Sizes Bore diameters 5mm up to 30mm.

Pages 110 - 113

Heavy Duty Rod Ends - integral spherical plain bearing

Male and female series E rod ends, maintenance free.

Sizes Bore diameters 6mm up to 60mm.

Pages 114 - 1120

Heavy Duty Rod Ends - integral ball bearing

Male and female series K rod ends. R3559 and R3560 have different bore sizes in relation to the thread size. All require maintenance.

Sizes Bore diameters 6mm up to 30mm.

Pages 121- 123

Heavy Duty Rod Ends - integral roller bearings

Male and female series E rod ends, require maintenance.

Sizes Bore diameters 12mm up to 30mm.

Pages 129 - 135

Stainless Steel Heavy Duty Rod Ends - integral spherical plain bearing

Male and female rod ends maintenance free. R3565 and R3566 K series rod ends, R3567 and R3568 E series rod ends.

Sizes R3565 and R3566 bore diameters 5mm up to 30mm. R3567 and R3568 bore diameters 6mm up to 60mm.

Pages 136 - 138

Low Cost Rod Ends - with spherical plain bearing

These are our most popular male and female rod ends. Maintenance free.

Sizes Female-bore diameters 5mm up to 12mm; Male-bore diameters 5mm up to 16mm.

Low Cost Rod Ends - spherical plain bearing

Male and female series E rod ends, maintenance free.

Sizes Bore diameters 6mm up to 80mm.

Pages 139 - 145

Stainless Steel Low Cost Rod Ends - spherical plain bearing

Male and Female Series K rod ends, maintenance free.

Sizes Bore diameters 5mm up to 20mm.

Pages 146 - 147

Plastic Rod Ends

Male and female rod ends, Series K and Series E rod ends.

Sizes Bore diameters 2mm up to 30mm.

Pages 150 - 157

Rod Ends with Studs

Steel and Stainless steel, male and female maintenance free.

Sizes M6 up to M16.

Pages 158 - 165

Hydraulic Rod Ends - spherical plain bearings

Various options from Weld on base through to female thread, require maintenance.

Sizes Bore diameters up to 160mm.

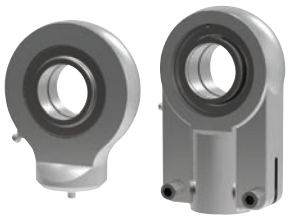

Pages 166 - 179

Spherical Plain Bearings - steel and stainless steel

Series K and series E spherical bearings. R3640 are our lowest cost, most popular option. R3641 and stainless steel R3642 require maintenance. R3640, R3644, and stainless steel R3645 are maintenance free.

Sizes Bore diameters 5mm up to 30mm.

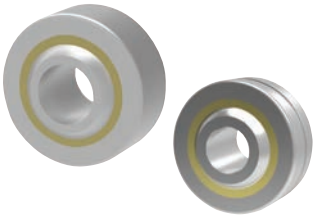

Pages 182 - 186

Rod ends with integral maintenance-free spherical plain bearings

In many cases heavy-duty rod ends with integral spherical plain bearings are most often used. They are above all used for small swivelling or tilting movements at low speeds. They stand out for their high load capacity and can also be used for shock-like loads. The rod end ball slides on a plastic bearing shell consisting of a glass fibre-filled nylon/teflon compound. This design assures a maintenance-free rod end. Heavy-duty plain bearing rod ends have slight initial movement friction and virtually no clearance. The plastic material used has another advantage in that it can absorb many foreign particles so that no damage can occur. The balls of heavy-duty rod ends with integral spherical plain bearings are hard chrome plated. This reliable corrosion protection ensures that the function of the rod end will not be affected by a corroded ball surface under humid operating conditions.

Rod ends with integral ball bearings

This design is especially suitable for high speeds, large swivelling angles or rotating movements with relatively low or medium loads. Prominent technical features are the low bearing friction, long-time greasing as well as the sealing against some dirt penetration (by means of shields on both sides). Under normal operating conditions the rod ends are maintenance-free.

Greasing nipples are provided for lubrication in case of rough operations and maximum loads. To avoid incompatibility with the production lubrication, we recommend lubrication with a calcium-complex-soap-grease. A special heat treatment procedure gives the rod end housing a raceway hardness adapted to the antifriction bearing, ensuring at the same time high stability with changing loads.

Rod ends with integral roller bearings

This design based on the structure of a self-aligning roller bearing is preferably used for high speed, large tilting angles or rotating movements under high loads. Compared to rod ends with ball bearings, rod ends with self-aligning roller bearings have essentially higher basic load ratings. This design is equipped with a cage to minimise the rolling friction and heat build-up. These rod ends, with long-time lubrication are under normal operating conditions maintenance-free.

Greasing nipples are provided for lubrication in case of rough operations and maximum loads. To avoid incompatibility with the production lubrication, we recommend lubricating with a calcium-complex-soap-grease.

Shields on both sides limit dirt particles from penetrating into the bearing. The rod ends with roller bearings are, subjected to a special heat treatment to obtain a raceway hardness adapted to the antifriction bearings, ensuring at the same time a high stability with changing loads.

ov-rod-ends-bearings-lnh- Updated - 28-03-2023

Static load capacity C_0 (plain bearings)

The static load capacity C_0 is the radially acting static load which does not cause any permanent deformation of the components when the spherical bearing or rod end is stationary, (i.e. the load condition without pivoting, swivelling or tilting movements).
It is also a precondition here that the operating temperature must be at normal room temperature and the surrounding components must possess sufficient stability.

The values specified in the tables are determined by static tension tests on a representative number of series components at 20°C normal room temperature. The static load capacity may vary with lower or higher temperature depending on the material.

In the case of all rod ends with plain bearings, the static load rating refers to the maximum permissible static load of the rod end housing in a tensile direction up to which no permanent deformation occurs at the weakest housing cross-section. The value in the product tables has a safety factor of 1.2 times the tensile strength of the rod ends housing material.

Static load capacity C_0 (roller and ball bearings)

For our rod ends with roller and ball bearings, the static load rating is the load at which the bearing can operate at room temperature without its performance being impaired as a result of deformations, fracture, or damage to the sliding contact surfaces (max 1/10,000th of the ball diameter).

Dynamic load capacity C (plain bearings)

Dynamic load ratings serve as values for calculation of the service life of dynamically-loaded spherical bearings and rod ends. The values themselves do not provide any information about the effective dynamic load capacity of the spherical bearing or rod end. To obtain this information, it is necessary to take into account the additional influencing factors such as load type, swivel or tilt angle, speed characteristic, max. permitted bearing clearance, max. permitted bearing friction, lubrication conditions and temperature, etc.

Dynamic load capacities depend on the definition used to calculate them. Comparison of values is not always possible owing to the different definitions used by various manufacturers, and because the load capacities are often determined under completely different test conditions.

Dynamic load capacity C (roller and ball bearings)

For our rod ends with roller and ball bearings, the dynamic load capacity is the load at which 90% of a large quantity of identical rod ends reach 1 million revolutions before they fail (due to fatigue of the rolling surfaces).

Permissible load

The maximum load is defined by the static basic load rating C_0. If static loads are a combination of radial and axial loads, the equivalent static load will have to be calculated.

Permissible load:

$$P_0 \leq C_0 \text{ (N)}$$

Where: P_0 = Static equivalent load (kN)

Self-aligning ball bearing = $P_0 = F_r + Y_0 \cdot F_a$

Self-aligning roller bearing = $P_0 = F_r + 5 \cdot F_a$

F_a = Axial load

F_r = Radial load

Y_0 = Axial factor, static, see individual product pages

C_0 = Basic static load rating (kN), see individual product pages

Nominal service life

Rod Ends with integral self-aligning ball bearing R3556, R3557, R3559, R3560, R3563, R3564.

Rotating:

$$G_{h_{rot.}} = 10^6 \frac{\left(\frac{C}{P}\right)^3}{60 \cdot n} \text{ (h)}$$

Oscillating:

$$G_{h_{osc.}} = 10^6 \frac{\left(\frac{C}{P \sqrt[3]{\frac{ß}{90}}}\right)^3}{60 \cdot f} \text{ (h)}$$

Where: P = Dynamic equivalent load (kN)

Self-aligning ball bearing = $P = F_r + Y \cdot F_a$

Self-aligning roller bearing = $P = F_r + 9.5 \cdot F_a$

C = Basic dynamic load (kN), see individual product pages

Y = axial factor, dynamic, see individual product pages

$Gh_{rot.}$ = nominal service life for rotation (hours of operation)

$Gh_{osc.}$ = nominal service life for rotation (hours of operation)

ß = half of swivelling angle (degree), ß = 90 should be used for rotation. **Condition:** Swivelling angle ß ≦ 3°. For swivelling angles ß<3° we recommend the use of heavy-duty spherical plain bearing rod ends

n = rotation speed (rpm)

f = frequency of oscillation (rpm)

h = hours

Nominal service life
Rod ends with integral self-aligning roller bearing R3561, R3562.

Rotating:

$$G_{h_{rot.}} = 10^6 \frac{\left(\frac{C}{P}\right)^{3,333}}{60 \cdot n} \text{ (h)}$$

Oscillating:

$$G_{h_{osc.}} = 10^6 \frac{\left(\frac{C}{P \sqrt[3]{\frac{ß}{90}}}\right)^{3,333}}{60 \cdot f} \text{ (h)}$$

See table on page 114 for key to symbols

Calculation example
At the rotating side of a crank mechanism a ball or roller bearing rod end should be installed. The expected service life amounts to at least 5000 hours.

Known: rotation speed n = 300 rpm, radial load F_r = 0,75 kN
Selected: R3557.R008 = 4,0 kN

$$G_{h_{rot.}} = 10^6 \frac{\left(\frac{C}{P}\right)^3}{60 \cdot n}$$

$$= 10^6 \frac{\left(\frac{4,0}{0,75}\right)^3}{60 \cdot 300} = \underline{\underline{8428 \text{ h} > 5000 \text{ h}}} \ ☑$$

Permissible load

The maximum permissible load is calculated by using equation **1**. If static loads are a combination of radial and axial loads, the equivalent static load will have to be calculated using equation **2**.

Permissible load:

Equation **1** $P_{max.} = C_0 \cdot C_2 \cdot C_4$

Equation **2** $P = F_r + F_a \leqq P_{max.}$

Where:

P_{max}	=	Maximum permissable load (kN)
C_0	=	static basic load (kN), see individual product pages
C_2	=	Temperature factor, see below
C_4	=	Factor for type of load, see below
P	=	Equivalent dynamic load (kN)
F_r	=	Radial load
F_a	=	Axial load (kN), **condition:** $F_a \leqq 0.2 \cdot F_r$

Load factor C_4 :

		C_4 :
Constant:		1,0
Pulsating:		0,3
Alternating:	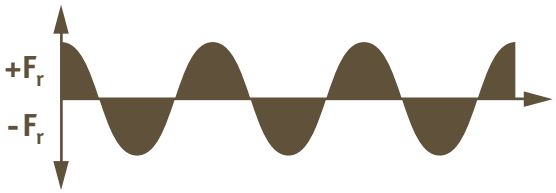	0,2

Temperature factor C_2:

Up to 60°C	1,0
60°C to 80°C	0,8
80°C to 100°C	0,7
100°C to 120°C	0,8

Permissible sliding velocity
The permissible sliding velocity of heavy-duty rod ends mainly depends on the load and temperature conditions. Heat generated by friction in the rod end housing is the main limitation on sliding velocity. When selecting the rod end size, it is necessary to determine the sliding velocity and the pv-value, which is a product of the specific bearing load p (N/mm²) and the sliding velocity v (m/s).

Specific bearing load:

$$p = k \cdot \frac{P}{C}$$

Permissible pv-value = 0,5 N/mm² · m/s

Where:
- P = Specific bearing load (N/mm²)
- C = Basic dynamic load rating (N), see individual product pages
- k = Specific load factor (N/mm²) for tribological pairing
  k = 50 N/mm²

Mean sliding velocity:

$$V_m = 5{,}82 \cdot 10^{-7} \cdot d_3 \cdot ß \cdot f$$

Permissible sliding velocity $v_{max.}$ = 0,15 m/s

Where:
- V_m = Mean sliding velocity (m/s)
- d_3 = Pivot ball diameter (mm), see individual product pages
- ß = Half swivelling angle (degree), for swivelling angle > 180°
  ß = 90° to be used
- f = Frequency of oscillation (rpm)

Nominal service life:

$$G = C_1 \cdot C_2 \cdot C_3 \cdot \frac{3}{d_3 \cdot ß} \cdot \frac{C}{P} \cdot 10^8$$

$$G_h = C_1 \cdot C_2 \cdot C_3 \cdot \frac{5}{d_3 \cdot ß \cdot f} \cdot \frac{C}{P} \cdot 10^6$$

Where:
- G = Nominal service life (number of oscillations or revolutions)
- G_h = Nominal service life (hours)
- C_1 = Load direction factor, see table on next page
- C_2 = Temperature factor, see previous page
- C_3 = Material factor, see alignment chart on next page

Where: C_1 = Load direction factor

$C_1 = 1{,}0$ = Single load direction

Alternating load direction at f < 30 rpm: $C_1 = 0{,}250$

Alternating load direction at f > 30 rpm: $C_1 = 0{,}125$

Alignment:

To find C_3 calculate $C_2 \cdot \frac{C}{P}$ then using this value on the chart below, read across to C_3

Where: C_2 = Temperature factor

C = basic dynamic load rating (N) see individual product pages

P = Specific bearing load (N/mm²)

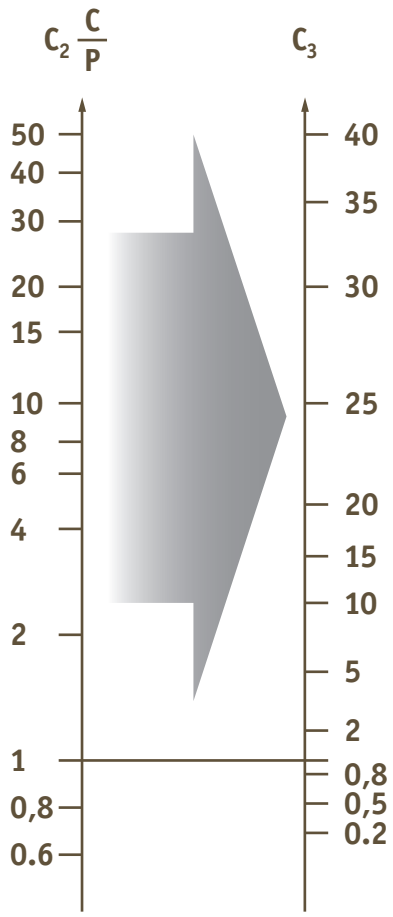

Calculation example

The rod end assembly of conveyor equipment calls for heavy-duty rod end with a service life of 7000 hours in conjunction with an alternating acting load of 5 kN. 25 swivelling moments with a swivelling angle of 20° take place per minute. The operating temperature amounts to approx. 60° C. The choice is a heavy-duty rod end R3554.R015 with: C = 13,4 kN, d_3 = 22mm.

Checking the permissible load of the rod end:

$$P_{max.} = C_0 \cdot C_2 \cdot C_4$$

$$P_{max.} = 41 \cdot 0{,}2 \cdot 1{,}0 = 8{,}2 \text{ kN} > 5{,}0 \text{ kN}$$

Where: C_0 = 41 kN
C_2 = 1,0 (temperature 60° C)
C_4 = 0,2 (alternating load)

Checking the permissible sliding velocity:

$$V_m = 5{,}82 \cdot 10^{-7} \cdot d_3 \cdot ß \cdot f = 5{,}82 \cdot 10^{-7} \cdot 22 \cdot 10 \cdot 25$$

$$= \underline{\underline{0{,}0032 \text{ m/s} < 0{,}15 \text{ m/s}}} \quad ☑$$

Checking the p · V -value:

$$pV = p \cdot V_m$$

$$pV = 18{,}66 \cdot 0{,}0032$$

$$= 0{,}06 \text{ N/mm}^2 \cdot \text{m/s} < 0{,}5 \text{ N/mm}^2 \cdot \text{m/s} \quad ☑$$

$$p = k \cdot \frac{P}{C} = 50 \cdot \frac{5000}{13400} \; 18{,}66 \text{ N/mm}^2$$

Nominal service life:

$$G_h = C_1 \cdot C_2 \cdot C_3 \cdot \frac{5}{d_3 \cdot ß \cdot f} \cdot \frac{C}{P} \cdot 10^6$$

$$G_h = 0{,}25 \cdot 1.0 \cdot 12 \cdot \frac{5}{22 \cdot 10 \cdot 25} \cdot \frac{13{,}4}{5{,}0} \cdot 10^6$$

$$= \underline{\underline{7308 \text{ h} > 7000 \text{ h}}} \quad ☑$$

Where: C_1 = 0,25 (alternating load direction, f = 25 rpm < 30 rpm)

$$C_3 = C_2 \cdot \frac{C}{P} = 1{,}0 \cdot \frac{13{,}4}{5{,}0} = 2{,}68$$

See alignment chart (on page 118) C_3 = 12

Where: d_3 = 22
f = 25 rpm
ß = 10° (half the swivelling angle 20° = 10°)
C = 13,4 kN
P = 5,0 kN

Low cost rod ends load ratings

The ultimate radial static load rating is measured as the failure point when a load is increasingly applied to a pin through the rod end's bore and pulled straight up while the rod end is held in place. Note that the actual rating is determined by calculating the lowest of the following three values:

1: Raceway material comprehensive strength (R value):

$$R = E \times T \times X$$

2: Rod end head strength (H value, cartridge type construction):

$$H = \left[\left(\frac{T}{2}\sqrt{D^2 - T^2}\right) + \left(\frac{D^2}{2} \times \mathrm{SIN}^{-1}\frac{T}{2}\right) - (\text{O.D. of Bearing} \times T)\right] \times X$$

Angle of $\frac{T}{2}$ expressed in radians

3: Shank strength (S Value) male threaded rod end:

$$S = [(\text{root diameter of thread}^2 \times .78) - (N^2 \times .78)] \times X$$

female threaded rod end:

$$S_2 = [(J^2 \times .78) + (\text{major diameter of thread} \times .78)] \times X$$

Where:
- E = Ball diameter
- T = Housing width
- X = Allowable stress
- D = Head diameter
- N = Diameter of drilled hole in shank of male rod end
- J = Shank diameter of female rod end

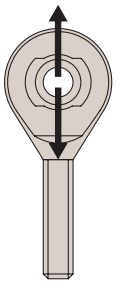

The axial static load capacity is measured as the force required to cause failure via a load parallel to the axis of the bore. Depending on the material types and construction methods, the ultimate axial load is generally 10-20% of the ultimate radial static load. The formula does not account for the bending of the shank due to a moment of force, nor the strength of the stake in cartridge-type construction.

Axial strength (A Value):

$$A = .78\ [\ (E + .176T)^2 - E2\ ] \times X$$

Where:
- X = Allowable stress (see table below)
- E = Ball diameter
- T = Housing width

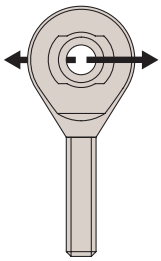

Material	Allowable stress (PSI)
300 Series Stainless Steel	35,000
Low Carbon Steel	52,000

Operating temperatures

Heavy-duty ball and roller bearing rod ends can be used for operating temperatures between -20°C and +120°C. The temperature range of heavy-duty rod ends with integral spherical plain bearing is between -30°C and +60°C, without affecting the load capacity. Higher temperatures will reduce the load capacity taken into account for the calculation of the 'working life' under the temperature factor C_2 on page 116.

Loads

The decisive parameters for the selection and calculation of heavy-duty rod ends are size, direction and type of load.

Radial or combined loads

The heavy-duty rod ends have been especially designed to cope with high radial loads. They can be used for combined loads, the axial load share of which does not exceed 20% of the corresponding radial load.

Unilaterally acting load

In this case the load acts only in the same direction, which means that the load area is always in the same bearing section.

Alternately acting load

In case of alternating loads, the load areas facing each other are alternately loaded and/or relieved, which means that the load changes its direction constantly by approximately 180°.

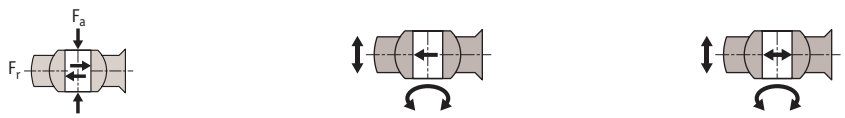

Swivelling angle

The swivelling angle is the movement of the rod end from one final position to the other. Half the swivelling angle a° is used to calculate the service or 'working life'.

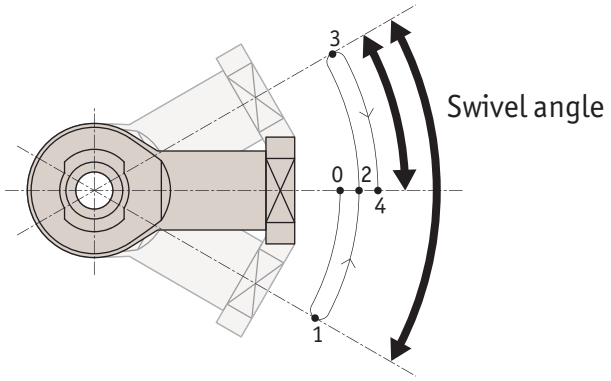

Angle of tilt

The angle of tilt, also called setting angle, refers to the movement of the joint ball and/or the inner ring to the rod end axis (in degrees). The tilting angle (a) indicated in the table for the heavy-duty ball and roller bearing rod ends corresponds to the maximum possible movement being limited by the shields on both sides. It is important that this tilting angle is not exceeded either during installation or operation, as otherwise the shields may be damaged. For heavy-duty plain bearing rod ends a distinction is made between the tilting angles (a1 and a2).

If the movement is not limited by adjacent components, then angle a1 can fully be used without affecting the rod end capacity. Tilting angle a2 is the movement limit when connecting a forked component.

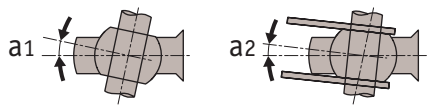

Nominal service life

The term 'nominal service life' is used for heavy-duty ball and roller bearing rod ends and represents the number of swivelling motions or rotations and/or the number of service hours the rod end performs before showing the first signs of material fatigue on the raceway or roller bodies. In view of many factors that are difficult or impossible to assess, the service life of several apparently identical bearings differ under the same operating conditions.

For this reason, the following method for the service life determination of heavy-duty ball and roller rod ends results in a nominal service life being achieved or exceeded by at least 90% of a large quantity of identical rod ends.

Working life

The term 'working life' is used with heavy-duty plain bearing rod ends. It represents the number of swivelling motions or rotations and/ or the number of service hours the heavy duty plain bearing rod end performs before becoming unserviceable due to material fatigue, wear, increased bearing clearance or increase of the bearing friction moment.

The 'working life' is not only influenced by the size and the type of load, it is also affected by a number of factors, which are difficult to assess. A calculation of the exact service life is therefore impossible. Field-experienced standard values for the approximate 'working life' can nevertheless be determined by using the following calculation procedure which is based on numerous results from endurance test runs and values from decades of experience. The values determined by this formula are achieved, if not exceeded, by the majority of the heavy-duty rod ends.

Heavy-duty rod ends (R3550, R3551, R3556, R3557, R3561, R3562, R3563, R3564, R3565, R3566, R3610, R3611, R3613, R3614)

d1		d1mp Tolerance Limit		V_{d1p}	V_{d1mp}	b1s Tolerance Limit		hs, h1s, h2s Tolerance Limit	
over	icl.	upper	lower	max.	max.	upper	lower	upper	lower
	6	+0,012	0	0,012	0,009	0	-0,12	+0,8	-1,2
6	10	+0,015	0	0,015	0,011	0	-0,12	+0,8	-1,2
10	18	+0,018	0	0,018	0,014	0	-0,12	+1,0	-1,7
18	30	+0,021	0	0,021	0,016	0	-0,12	+1,4	-2,1
30	50	+0,025	0	0,025	0,019	0	-0,12	+1,8	-2,7

Heavy-duty rod ends (R3553, R3554, R3559, R3560, R3567, R3568)

d1		d1mp Tolerance Limit		V_{d1p}	V_{d1mp}	b1s Tolerance Limit		hs, h1s, h2s Tolerance Limit	
over	icl.	upper	lower	max.	max.	upper	lower	upper	lower
	10	0	-0,008	0,008	0,006	0	-0,12	+0,8	-1,2
10	18	0	-0,008	0,008	0,006	0	-0,12	+0,8	-1,2
18	30	0	-0,010	0,010	0,008	0	-0,12	+1,0	-1,7
30	50	0	-0,012	0,012	0,009	0	-0,12	+1,4	-2,1
50	80	0	-0,015	0,015	0,011	0	-0,15	+1,8	-2,7

Dimensions and tolerance symbols

d_1 = nominal bore diameter of the inner ring or joint ball.

d_{1mp} = mean bore diameter deviation in one plane, arithmetical mean of the largest and smallest bore diameter.

V_{d1p} = bore diameter variation in one plane, difference between the largest and smallest bore diameter.

V_{d1mp} = mean bore diameter variation, difference between the largest and smallest bore diameter of one inner ring or joint ball.

b_{1s} = single inner ring or joint ball width deviation.

h, h_1, h_2 = single length from inner ring or ball bore centre to shank end.

h_s, h_{1s}, h_{s2} = single length variation of a single rod end.