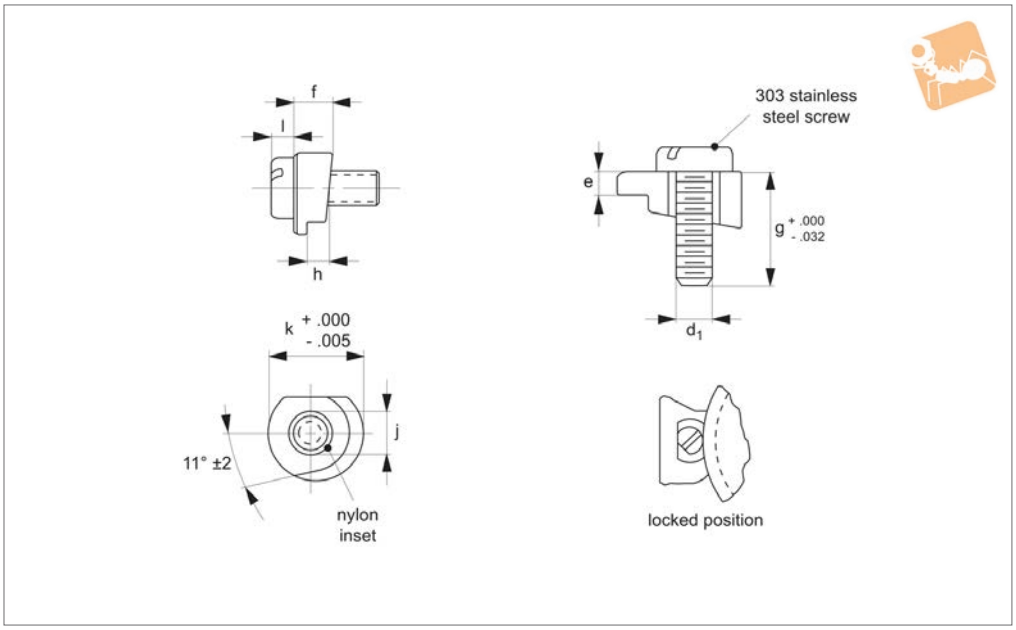

P0292

Material
Stainless steel (A4, AISI316, DIN 1.4401), with nylon insert.
Supplied with A2 (AISI303) stainless steel screw (screws not supplied with P1092.019, .020, or .026).

Technical Notes
Quick release, faster clamping and self-locking.

Tips
Bolt circle: use the larger of the following two bolt circles:
add 6,86 to max. flange diameter or add 10,16 to max. groove base diameter.

Order No.	h_1 ±6,08	d_1	h_2 ±0,08	h_3	h_4	l_1 +0|-0.8	w_1	w_2 +0|-0.15
P0292.079	0.79	M3	1.02	1.80	1.73	8.0	9.90	3.18
P0292.157	1.57	M3	1.02	2.59	1.73	8.0	9.90	3.18
P0292.158	1.58	M3	1.27	2.84	1.73	10.0	9.90	3.18
P0292.159	1.57	M3	1.60	3.18	1.73	10.0	9.90	3.18
P0292.198	1.98	M3	1.60	3.58	1.73	10.0	9.90	3.18
P0292.236	2.36	M3	1.02	3.38	1.73	10.0	9.90	3.18
P0292.237	2.36	M3	1.27	3.63	1.73	10.0	9.90	3.18
P0292.238	2.36	M3	1.60	3.96	1.73	10.0	9.90	3.18
P0292.318	3.18	M3	1.27	4.45	1.73	10.0	9.90	3.18
P0292.396	3.96	M3	1.02	4.98	1.73	10.0	9.90	3.18
P0292.572	5.72	M3	1.60	7.32	1.73	12.0	9.90	3.18
P0292.635	6.35	M3	1.60	7.92	1.73	16.0	9.90	3.18

Syncro Clamps

P0294

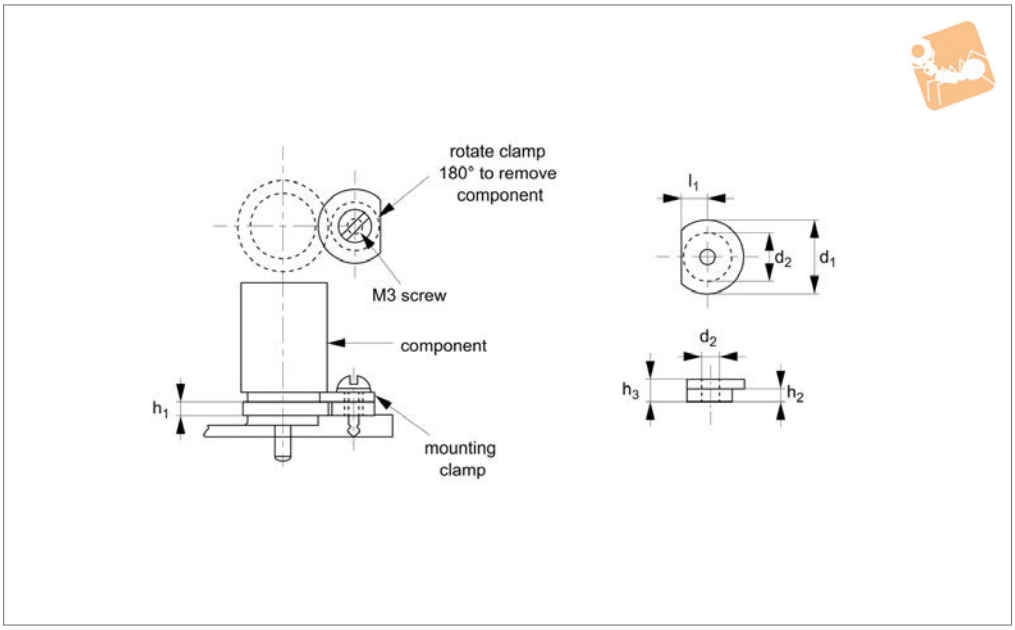

Material
Stainless steel (A2, AISI 303 or 416) or aluminium.

Technical Notes
416 stainless steel is a less expensive stainless steel version as it is less corrosion resistant than the A2 (AISI 303) grade.

Order No.	h_1	d_1	d_2	d_3	h_2	h_3	l_1	Material
P0294.015	1.57	9.5	6.3	3.2	1.32	2.54	3.2	Stainless 416
P0294.018	1.83	9.5	6.3	3.2	1.60	2.87	3.2	Stainless 416
P0294.023	2.36	9.5	6.3	3.2	2.08	3.33	3.2	Stainless 416
P0294.031	3.18	9.5	6.3	3.2	2.77	4.60	3.2	Stainless 416
P0294.032	3.18	9.5	6.3	3.2	2.84	4.11	3.2	Stainless 416
P0294.039	3.96	9.5	6.3	3.2	3.63	4.90	3.2	Stainless 416
P0294.057	5.72	9.5	6.3	3.2	5.41	6.68	3.2	Stainless 416
P0294.063	6.35	9.5	6.3	3.2	6.05	7.32	3.2	Stainless 416
P0294.015-A2	1.57	9.5	6.3	3.2	1.32	2.54	3.2	Stainless A2
P0294.018-A2	1.83	9.5	6.3	3.2	1.60	2.87	3.2	Stainless A2
P0294.023-A2	2.36	9.5	6.3	3.2	2.08	3.33	3.2	Stainless A2
P0294.031-A2	3.18	9.5	6.3	3.2	2.77	4.60	3.2	Stainless A2
P0294.032-A2	3.18	9.5	6.3	3.2	2.84	4.11	3.2	Stainless A2
P0294.1039-A2	3.96	9.5	6.3	3.2	3.63	4.90	3.2	Stainless A2
P0294.057-A2	5.72	9.5	6.3	3.2	5.41	6.68	3.2	Stainless A2
P0294.063-A2	6.35	9.5	6.3	3.2	6.05	7.32	3.2	Stainless A2
P0294.015-AL	1.57	9.5	6.3	3.2	1.32	2.54	3.2	Aluminimum
P0294.023-AL	2.36	9.5	6.3	3.2	2.08	3.33	3.2	Aluminimum
P0294.031-AL	3.18	9.5	6.3	3.2	2.77	4.60	3.2	Aluminimum
P0294.063-AL	6.35	9.5	6.3	3.2	6.05	7.32	3.2	Aluminimum